DOMESTIC ENGINEERING

A Weekly Record of Progress in Plumbing, Heating, Ventilation and all Matters Pertaining to Domestic Sanitation.

ESTABLISHED 1889

Whole No. 1173. CHICAGO, JUNE 5, 1915. Vol. 71, No. 10.

PUBLISHED ON SATURDAY OF EACH WEEK BY THE
DOMESTIC ENGINEERING COMPANY
445-447 Plymouth Court, Chicago.
Address all Correspondence to Chicago Office.
Long Distance Telephone: Harrison 951.
Eastern Office, 200 Fifth Ave., New York City. Tel. Gramercy 4897.
F. S. Kenfield, Pres. F. P. Keeney, Treas. and Gen. Mgr.
F. De Forest Winslow, Vice-Pres. O. T. Carson, Secretary.

EDITORIAL STAFF.
F. P. Keeney, Editor.
R. Herlov, W. H. Burquest, C. L. Davis, Associate Editors.

ADVERTISING REPRESENTATIVES.
O. T. Carson.....Western Representative
F. De Forest Winslow.....Eastern Representative

TERMS OF SUBSCRIPTION.
United States, Cuba and Mexico, $2.00 per year.
Canada, $3.00 per year. Foreign, $4.00 per year.
Current Copies, 10c each. Back numbers, 25c each.

Entered as Second-Class Matter at the Postoffice at Chicago, Ill

A STANDING PUBLICITY COMMITTEE.

To Educate the Public.

IT HAS been fittingly observed that publicity is the great arc-light which dispels the darkness of ignorance and distrust. Publicity is, in brief, popular education.

Various business interests have found that publicity illumines the public mind, and that if effectively applied, it will correct many erroneous conceptions.

For years master plumbers and fitters have realized that they have been misunderstood by a large percentage of the public and that this misunderstanding, if permitted to develop unchecked, would contribute no constructive good to the craft.

The public mind, for several generations, has been crammed full of misconceptions about the plumber and his work. People have been educated or rather mis-educated to the idea that the word "plumber" is synonomous with the term "extortionist."

The vaudeville stage, the movies, and the comic paragraphers have made capital out of the plumber, picturing him always as a grasping, greedy and unreasonable being who would constantly bear watching. Some comic papers have even printed jokes to the effect that plumbers are closely related to porch climbers and that householders should "have a care" about their silverware and other valuables when plumbers are working in and about the house.

This nonsense, which has clung tenaciously to the plumbing profession, has met with but little opposition on the part of the trade. No systematic and concerted action of a state or national character has been launched by the plumbers as a body. That there is need of such action is now readily acknowledged by men in the trade.

Progressive master plumbers now feel that it is time to reform or re-educate the public mind and thereby correct the impression that the plumber is a reckless extortionist who profits by over-charging for services rendered.

The profession is now beginning to manifest a combative disposition to uphold the dignity and ethical principles of the plumbing business. The attitude of the plumbers toward the promulgation of jokes discrediting them, has grown from good-natured tolerance to righteous resentment.

At various state conventions of the craft the problem of correcting the popular point of view concerning the plumber has been discussed, and the remedy suggested has been—Publicity.

We agree with this suggestion. Publicity in the form of newspaper articles about the plumber and the plumbing business will in time accomplish revolutionizing results.

We would suggest further, that a standing committee be appointed by each state association of master plumbers, whose duty it should be to distribute educational articles to the public press, and also to forward communications to theatrical managers and moving picture companies protesting against unfounded jests concerning the craft.

The said committee could make arrangements to have newspapers publish articles on the sanitary mission of the plumber as a great force for health preservation in the community.

"Domestic Engineering" will be glad to cooperate with all such committees (if appointed) and suggest ways and means of conducting educational campaigns of this kind. The editor will also be pleased to furnish to the trade, plumbing articles written by Governors and Senators which newspaper editors will, as a rule, be glad to reprint.

Modern Practice in Heating and Ventilation

XXV.—Vacuum Heating, Air Line Systems Illustrated and Described in Detail

By ALFRED G. KING

Continued from Page 184 in May 15th Issue.

VACUUM heating systems are usually known by the the name of the maker or originator of the appliances used with the system, as for instance, the Van Auken system, the Eddy system, the Dunham system, the Webster system, etc.

The original patents covering vacuum heating or the method of sucking or pulling the steam through the radiators, coils and piping of a heating system, such as were

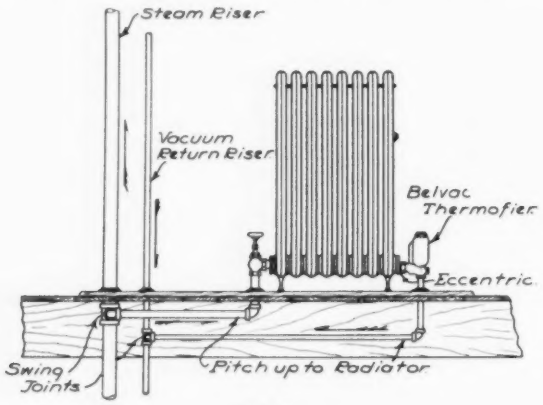

Fig. 1.

taken out and owned by Williams, Skiffington, and others, expired years ago, and the vacuum patents of to-day cover principally the special traps or valves used and not the vacuum system as a system.

In the development of vacuum heating the major effort of the engineers has been towards the perfecting of the radiator trap or valve used on the return end of the radiator or coil and on the piping system where required. The methods employed to suck the steam through the system were meant primarily to assist in circulating the exhaust steam from the engine through the system of piping and radiators without producing a back pressure on the engine. The vacuum pump was developed for this purpose and in applying the method it was found that the pump would pull the steam into the return line, frequently as far as the end of it or to the pump itself, requiring the use of jet water in the returns in order that the pump would work properly. The use of a pump in this manner had the effect of short-circuiting the steam through the lower or first floor radiators, which prevented the upper radiators in the building from receiving their full share of the steam.

With the expiration of the basic patents covering vacuum heating, engineers in all sections of the country began experimenting to develop an appliance for use on the return of each radiator or coil which would automatically bottle up the steam in order to prevent its entry into the return line, or short-circuiting, and which would open automatically to pass the accumulated condensation and air from the radiator or coil.

We believe that the earliest efforts of the engineers were directed towards the perfecting of a float trap or valve, and this no doubt was influenced by their experience with the float or bucket type of steam traps. The thermostatic feature, or that of employing an expansion chamber partially filled with a volatile liquid such as naphtha, ether, alcohol or choloroform or a combination of these liquids, was tried out and various forms of such devices were experimented with. Many failures resulted from these early efforts, although considerable success with valves of the float type was attained by the engineers.

We have already mentioned the Belvac Thermofier of Van Auken as being one of the earliest and best of the float devices. Another float valve quite similar in construction and operation to the Thermofier is the Monash Radifier of the Monash-Younker Co. This valve being so nearly alike to the Van Auken device illustrated in the preceding chapter, it seems quite unnecessary to illustrate it.

Warren Webster & Co. has for several years used a float type of return valve which they call the Webster water-seal motor and as this company manufactures and uses several types of thermostatic traps as well, and as both the Consolidated Engineering Co. and the Monash-Younker Co. use both the float and thermostatic traps, it would be interesting to make a comparison of their opinions as to the advantages and disadvantages of each type of valve.

The operation of a trap of the float type is said to be continuous, that is, the air and condensation are discharged from the radiator as fast as they accumulate, while the

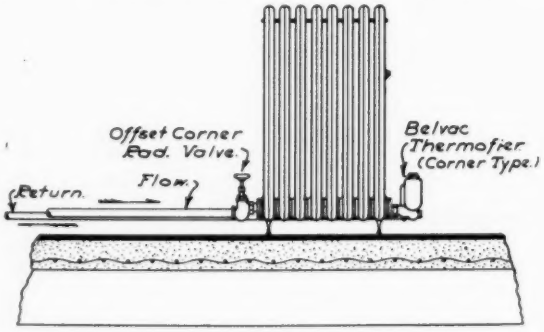

Fig. 2.

action of a trap of the thermostatic type is more or less intermittent, the trap remaining closed after steam enters it until sufficient water has accumulated to surround the expansion chamber which slowly contracts as the water cools, thus opening the orifice discharging into the return. Whether or not this intermittent operation is a detriment is questionable. We should say not, as sufficient condensation cannot accumulate in the radiator to impair its efficiency before the trap will operate to free it of the accumulated water and air.

The operation of a trap of the thermostatic type is absolutely noiseless, which cannot be said of some float

traps, although the float traps of the more perfect type are noiseless in operation.

It is not our purpose to enter into an argument in favor of or against any particular make of radiator trap or return valve, as we desire only to call attention to the types of valves used, and to discuss briefly some of the advantages and possible disadvantages of each type.

The greatest economy obtained from the use of a vacuum heating apparatus is without doubt found in a building or installation where an abundance of exhaust steam is available for use in the heating system. The arrangement of the various parts of such a system is practically the same for all installations, the shape of the boiler and engine room and the space available conditioning the location of the various appliances and the method of piping to them.

Pressure regulating valves, back pressure valves, pump governors, oil and steam separators, vacuum and boiler feed pumps, open and closed types of feed water heaters,—these and other valves and appliances necessary to complete a modern vacuum exhaust steam heating system are to be had in great variety, and need not be discussed or illustrated at this time.

In the work of constructing or installing a vacuum system there are many detailed methods of making pipe, radiator and coil connections which, if carefully followed, will result in the work having a mechanical and finished appearance, and to illustrate this we shall show some of the construction details suggested by the Consolidated Engineering Co.

The ordinary method of connecting a radiator to the steam and return risers is shown by Fig. 1. The steam connection to the radiator is made with a swing joint at the riser. A Belvac Thermofier is shown at the return end of the radiator connected into an eccentric radiator bushing. The branches—flow and return—should pitch up from the risers to the radiators sufficiently to provide for perfect drainage. These branches may be run on the

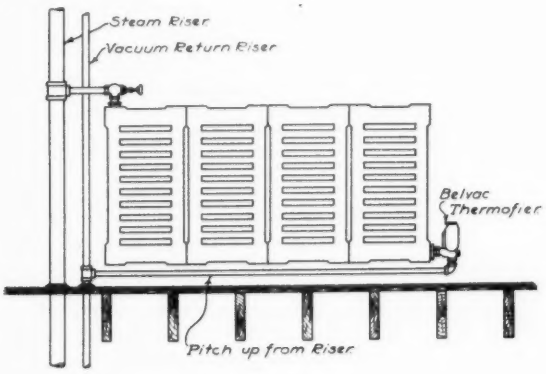

Fig. 3.

ceiling of the floor below if desired and the radiator connections or "spuds" extended upward through the ceiling and floor.

In setting radiators in office or public buildings of steel frame-work construction having re-enforced concrete or tile floors the risers are frequently run in the corner of a room and the radiator connection made above the floor line. When a condition of this kind exists the branches are run along the baseboard and an offset corner radiator valve is used on the supply end of the radiator as illustrated by Fig. 2, which shows a corner type of the Thermofier at the return end of the radiator.

When a radiator of the wall type is employed the connections to it may be made as shown by Fig. 3. All connections are made above the floor line. The steam is connected at the top of one end of the radiator and the water and air are taken out of the bottom of the opposite end. On the illustration shown the regular type of Belvac Thermofier is used.

Pipe coils are commonly used as radiating surface in warming certain types of factories, garages and buildings

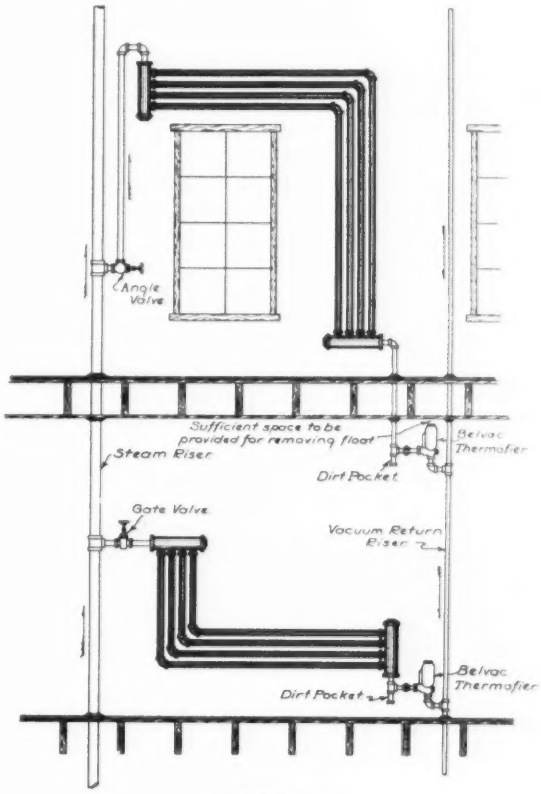

Fig. 4.

of like nature. Fig. 4 illustrates two methods of building and connecting coils. The lower coil is a "Harp" or "Mitre" coil, as usually constructed. The upper coil is this ordinary form inverted as would be the case to allow for a work bench or to clear windows or other obstruction. Note that dirt pockets are provided on each return connection to collect such of the dirt and foreign matter that might otherwise pass through the coil and possibly clog the valve of the radiator trap.

Fig. 5 illustrates a very neat and effective method of draining the bottom of a drop or down feed riser and also a method of connecting a radiator to the piping system at its base. To better understand the method illustrated a plan of the same is shown by Fig. 6.

In a down feed system the greatest amount of air and condensation in the piping collects at the base of the risers and this must be effectually removed if the system is to heat evenly throughout.

The neatness with which a fitter makes the connections to coils and radiators and the methods employed to provide for expansion of the piping are the most noticeable features of the construction of a heating apparatus.

The general use of vacuum heating systems for large buildings and groups of buildings is commercially of more importance than the warming of residences and small

buildings by return line vacuum, vacuum-vapor or vapor systems. We think, however, that the operation of the latter type of apparatus is more interesting as the various systems now offered to the trade embody so many different ideas and methods of exhausting the air and returning the condensation that a study of each system is more or less instructive. These systems are hard to classify yet we shall endeavor to divide them for our consid-

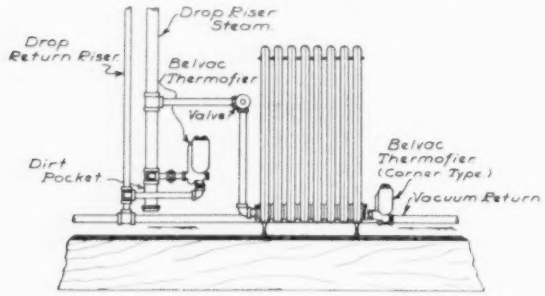

Fig. 5.

eration into Vapor Return-Line systems, Vacuum-Vapor Return-Line systems and Modulated or Atmospheric systems; at the same time we realize that this classification is hardly correct.

The development of devices intended to rid the heating system of air and to assist in circulating steam with practically no pressure, has been so rapid that we can only touch here and there in commenting upon the methods used.

In the work of planning and installing a return-line vacuum system it is of importance that mains and returns of sufficient capacity be provided. All of the piping employed on a vacuum system is considerably smaller than is used for the regular type of pressure system, therefore a knowledge of the requirements of a vacuum system is essential.

A 2-inch main (100 ft. long with usual number of fittings) will supply from 300 to 700 sq. ft. of direct cast iron radiation, and other sizes may be estimated as follows:

2½-inch main	700 to 1,200 sq. ft.
3 -inch main	1,200 to 1,800 sq. ft.
3½-inch main	1,800 to 2,500 sq. ft.
4 -inch main	2,500 to 3,500 sq. ft.
5 -inch main	3,500 to 5,000 sq. ft.
6 -inch main	5,000 to 7,500 sq. ft.

There is a considerable difference of opinion among engineers as to pipe capacities required. The table given

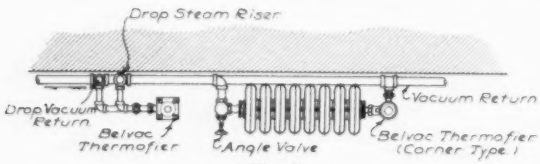

Fig. 6.

is about an average of the requirements suggested by several engineering authorities.

The return connections from each radiator and coil are from ½ to ¾-inch according to the square feet of surface in each unit.

Most expansion traps of the ordinary type are built for ½-inch connections, although a few are to be obtained having ¾-inch connections.

It is reckoned that an expansion trap with ½-inch connections is of sufficient size to take drain from 300 to 350 sq. ft. of direct cast iron radiation or its equivalent in pipe coils.

Regarding the work of traps of the float type, the Belvac Thermofier, and the Monash Radifier also, are made in several sizes for different requirements. Those used with the ordinary radiator up to 300 sq. ft. and for small pipe coils have ½-inch connections. For 600 to 1,200 sq. ft. of direct radiation (cast iron) a trap with ¾-inch connections is employed.

Practically all of the more prominent makers of vacuum heating specialties, such as radiator traps, etc., maintain an engineering department who, when extraordinary conditions are encountered, will advise as to the best method of overcoming such difficulties.

WHAT THE LAW DECIDES.

Right of Stoppage in Transitu.

There is no question, the Supreme Court of South Carolina says, in F. W. Poe Manufacturing Co., 80 Southeastern Reporter, 194, but that the seller has the right of stoppage in transitu, after he has sold goods on credit and delivered them to a carrier, warehouseman, or other intermediary for delivery to the buyer, upon discovery of the buyer's insolvency, to retake the goods before they have reached the actual possession of the buyer, and enforce his lien against the goods for the purchase price. The right to exercise stoppage in transitu is not defeated where goods are placed in a warehouse, unless they are subject to the control and order of the buyer, and, further, there can be no delivery by a mere order to that effect, unless the order is actually delivered and demand made under it. In this case goods sold to one company were to be delivered to another, an intervening, independent contractor, to be finished and then delivered to the buyer, and it is held that they were still subject to the right of stoppage in transitu while in the possession of such intermediate contractor.

To What Partners Are Entitled.

In the absence of any special agreement between partners upon the subject, the rule of law is that they are to share equally in both profits and losses, and the mere fact that they have put an unequal amount of capital into the common stock, or that one has put in all the capital and the others only their skill and industry, will make no difference in the rule. Partners are not entitled to interest on their respective capital unless there is some agreement to that effect. Such an agreement may be inferred if they have been in the habit of charging such interest in their accounts; but in the absence of any evidence on that question, they are not entitled to interest. Even when one partner has brought in his stipulated capital, and the other has not, the former will not be entitled to interest on the winding up of the partnership, if it has not been previously allowed and charged in the accounts of the firm, and where a person has been paid for services by a share of the profits, interest on capital cannot be charged against him unless there is some agreement to that effect. Furthermore, the Supreme Court of Nebraska says, in Dovey et al., vs. Dovey et al., 146 Northwestern Reporter, 923, that, as a general rule, where a surviving partner continues to use the capital of a deceased partner in the business, the representatives of the latter, in the absence of any agreement to the contrary, have the election either to demand interest on the capital used or the profits earned by its use, the latter being accretions to the fund owned by them. There is, however, no inflexible rule governing all cases.

Proposed Plumbing Law for Pennsylvania

Bill Now Pending Before the Legislature of Pennsylvania, Known as No. 1348

AN ACT providing for the examination, licensure and registration of persons, firms or corporations engaged or engaging in the business or work of plumbing or house drainage, and imposing fines, penalties and forfeitures for violation thereof, and authorizing and requiring cities of the second and third class and boroughs to provide for the appointment and payment of plumbing inspectors, and authorizing masters and employing journeymen plumbers, who are licensed in one city or borough, to receive a license to work in any other city or borough of the Commonwealth of Pennsylvania.

Section 1. Be it enacted by the Senate and House of Representatives of the Commonwealth of Pennsylvania General Assembly met, and it is hereby enacted by the authority of the same: That from and after the passage of this act it shall not be lawful for any persons to carry on or work at the business of plumbing or house drainage in cities of the second and third class or in any borough of this Commonwealth, until a certificate or license to engage in or work at said business shall have been granted said persons by the director of the department of public safety or department, or board or bureau of health of such cities or boroughs, nor until they have registered as such in the office of the department or board or bureau of health of said cities or boroughs.

Provided, however, that nothing in this act shall be construed to prevent the employment or working of apprentices under the direction of duly registered and licensed master or employing plumbers, and provided further that master or employing plumbers, having a bona fide place of business in said second or third class cities or in any borough of this Commonwealth at the time of the approval of this act, and resident journeymen plumbers who have served not less than four years' apprenticeship at the business, shall not be required to undergo any examination by an examining board, and they shall be entitled to register on application, provided said persons, firms or corporations make application for registry within six months after the approval of this act and annually thereafter between the first and thirty-first days of December of each year, as required by section two of this act.

Section 2. All and every person or persons engaged or engaging in the business or work of plumbing and house drainage in said cities or boroughs shall apply in writing to the said director of the department of public safety, department or board or bureau of health for such certificate or license, and if, after proper examination made by the department or board or bureau of health of said cities or boroughs, such person or persons so applying shall be found competent, the same shall be certified to the director of the department of public safety, department or board or bureau of health, who shall thereupon issue a certificate or license to such person or persons, which shall for the period of one calendar year or fractional part thereof, next ensuing the date of such examination, entitle him or them to engage in or work at the business of plumbing and house drainage. The mayor of said cities or boroughs is hereby authorized to appoint a board of examiners to consist of the health officer or superintendent of the department or board or bureau of health, one plumbing inspector and two competent master or employing plumbers, in no wise connected with the city government, who shall examine all applicants for license under the provisions of this act. The said board shall make all reasonable rules, regulations and examinations, which shall be approved by the said director of the department or board or bureau of health. An examination of any one member of a firm or corporation or of the superintendent or foreman therefor shall be deemed sufficient. Said person or persons, firm or corporation, engaged or engaging in the business of plumbing or house drainage, shall pay for each examination the sum of five dollars, and each journeyman or person engaged in the work shall pay the sum of fifty cents, which sum shall be paid into the city treasury for the use of said cities or boroughs. The proper officers of said cities or boroughs are hereby authorized to pay to the plumbers acting on said board, the sum of two dollars per day for each day or session thus actually employed.

The mayor of said cities is hereby authorized and required to appoint a competent person as plumbing inspector, whose duty it shall be to supervise, superintend and inspect all plumbing and house drainage in conformity with the provisions of this act. And the several cities or boroughs are hereby authorized and required to make proper provision for the payment of the salary of the said plumbing inspector, as provided by law.

Every registered master plumber shall have a bona fide place of business in said cities or boroughs and shall display on the front of his or their place of business a sign "Registered Plumber," bearing the name or names of the person, firm or corporation, in letters not less than three inches high.

No person other than a registered master plumber shall be allowed to carry on or engage in the business, nor shall any person or persons expose the sign of plumbing or house drainage or any advertisement pertaining thereto, unless he or they have first secured a license or certificate and been registered in the office of the board or bureau of health of such cities or boroughs, nor shall any person or persons, other than a registered master plumber or person, in his or their employ, or under his or their supervision, be allowed to alter, repair or make any connection with any drain, soil waste, or vent pipe, or any pipe connected therewith.

Every registered master plumber, firm or corporation shall give immediate notice of any change in his, their or its place of business, and upon his, their or its retirement from business shall surrender his, their or its certificate of registry to the board or bureau of health. Every person, firm or corporation or representative thereof in registering shall give the full name or names of the person, firm or officers' names of the corporation, for which he or they shall register.

At the expiration of each calendar year said certificate or license shall be null and void. A licensed master or journeyman plumber, desiring to continue in or work at the business of plumbing and house drainage for the ensuing year, shall, between the first and thirty-first days of December of each and every year, surrender the said certificate or license to the department or board or bureau of health and re-register his, their or its name or names and business or home address upon such form or

forms as may from time to time be furnished by said department or board or bureau of health.

A re-examination will not be necessary for re-registration unless the licensed master or journeyman plumber should have failed to make an application for re-registration at the specified time. The sum of one dollar shall be paid by master plumbers, firms or corporations, and the sum of twenty-five cents by journeymen plumbers for re-registration, which sum shall be paid into the city treasury for the use of said cities or boroughs. A register of all such applicants and the license or certificates issued shall be kept in said department board of bureau of health, which said register shall be open to the inspection of all persons interested therein. Any person, firm or corporation holding a license or certificate granted by any first, second or third class city or any borough of this Commonwealth to engage in or work at the business of plumbing and drainage work, desiring to do plumbing or drainage work in any other city than the one in which said license or certificate was granted, shall, without examination, be registered before entering upon such work; provided, however, that the registration shall be restricted and limited to such plumbing and drainage work, as he, they or it shall have contracted for at the time of registry. On the completion of such contract or contracts the registration of such person, firm or corporation shall be null and void, and no further permit shall be issued until he, they or it shall have first registered his or its name or their names and address, as hereinbefore provided.

Section 3. On application at the office of the health officer or the board or bureau of health in any city or borough within this Commonwealth, any journeyman plumber, who shall produce a certificate of registry or license for the current term issued to him by any other city of the first, second or third class or by any borough within the Commonwealth, shall forthwith be registered as a journeyman plumber and shall receive a license to work as a journeyman plumber at the trade of plumbing within the city or borough, for which he shall present his application. He shall not be required to undergo any examination by the examining board, and he shall pay the usual sum required for a renewal of a registry or license.

Any person or persons who shall fail to comply with any of the provisions of this act regarding the procuring of a license or certificate to engage in or work at the business of plumbing or house drainage, shall be liable to a fine of not less than ten dollars nor exceeding fifty dollars for each and every day he or they shall engage in or work at said business without first having obtained said certificate or license. And any person or persons who shall violate any of the rules, regulations or requirements of any department or board or bureau of health regarding the construction or re-construction of plumbing or house drainage, shall be liable for every such offense to a fine of not less than ten dollars nor more than fifty dollars, which fines shall be recoverable before any alderman, magistrate or justice of the peace in said cities or boroughs by summary proceedings and shall be sued for in the name of such cities or boroughs, and when collected shall be paid into the treasury thereof. In default of the payment of any fine or penalty imposed by any police magistrate or justice of the peace under the provisions of this act, the person or persons so offending may be committed to the jail, workhouse or other penal institution of the county, in which said city is situated, for a period not exceeding thirty days.

Section 4. The department or board or bureau of health are hereby authorized and directed to make such rules and regulations as to the construction of plumbing and house drainage work as such department, board or bureau of health may from time to time deem advisable for the better protection of the health or safety of the community, and that may be approved by the councils or commissioners of the said cities or boroughs.

Section 5. The members of the State Board of Health shall be, ex officio, members of the department or board or bureau of health in every city or borough within the Commonwealth, and a copy of all rules and regulations relating to the construction of plumbing and house drainage work that may be adopted from time to time, shall be forwarded to their office at Harrisburg, as soon as possible after adoption.

Section 6. All acts or parts of acts inconsistent with the provisions of this act or supplied thereby are hereby repealed.

Questions and Answers

TO HEAT STORAGE TANK WITH HOT WATER.

Editor "Domestic Engineering":—Will you kindly give me some advice on the following problem:

The accompanying sketch, Fig. 1, shows a tube on pipe sealed below the water line in a boiler and connected to coil in storage tank for the purpose of heating with circulation of water from boiler instead of steam. Will the water stay in suspension with air chamber and air valve,

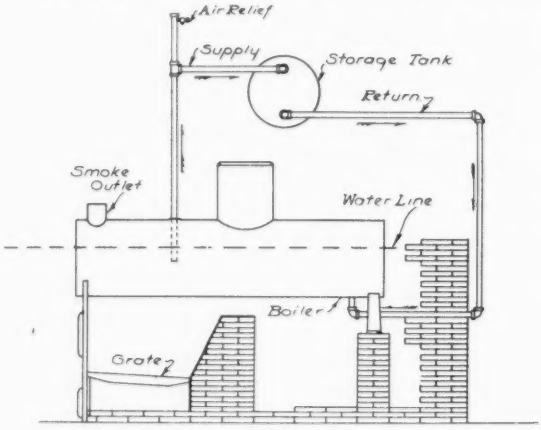

Fig. 1.

as shown, by raising the pressure on boiler to fill coil and close air valve? Is the arrangement practical?

Seattle, Wash. H. F. D.

A copy of the sketch submitted with the above communication is shown by Fig. 1, and answering directly the question of correspondent will say the method of installation suggested is not practical.

If the water was not in circulation it might be possible to hold it in suspension for a period, but all water contains more or less air and when heated the air (present in the form of bubbles) is expanded and will collect at the top of the hot water system. Under these conditions we do not think it possible to circulate the water and hold it in suspension.

We suggest the use of a steam coil in the storage tank

from which the hot water heating system should be connected, and the water thus heated will continue to circulate long after the fire in the steam boiler is banked or allowed to go out.

NOISY WATER SUPPLY PIPING.

Editor "Domestic Engineering":—The water pipes throughout a large two-story residence make a great noise whenever a faucet is shut off.

The building was erected two years ago, the pipes concealed, and the work supposed to be of the best.

Most of the faucets are of the Fuller type, and there are no air chambers on fixture supplies.

I put compression bibbs on the laundry tubs, which produced only slight relief.

I would like to know whether it would do any good to put air chambers on the supplies, or whether it would be possible to put an air chamber on the service pipe. The water has to travel a long distance through ¾-inch pipe.

Antonito, Colo. A. F.

A sketch of the piping is shown in Fig. 1. There are several things that might cause this trouble, but we are unable to state definitely what the cause is, as correspondent gives no information as to pressure, etc.

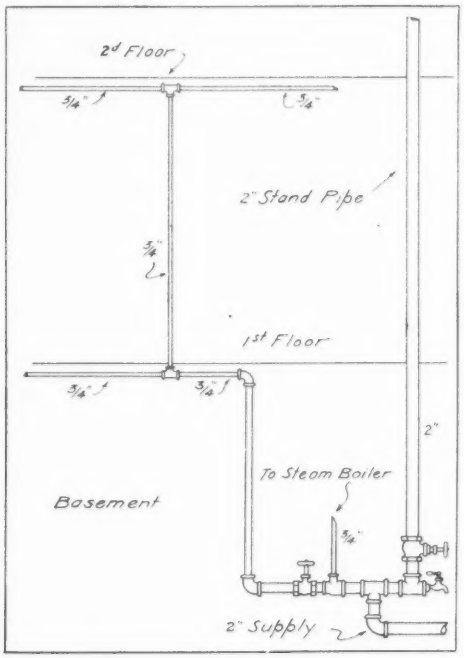

Fig. 1.

Fuller bibbs often cause this jarring of the pipes, owing to their very quick closing against a moving column of water. The greater the pressure the greater would be the annoyance from Fuller work. Compression work or the modern quick-pression work would overcome the trouble if this is the cause.

If the jarring did not occur when the system was first installed, it would look as if one or more of the bibbs or a ball cock were worn, or there was a loose part on one or more of them. In this case, the opening of a bibb anywhere in the house might so relieve the pressure as to cause the loose part to vibrate, these vibrations causing the noise to be telephoned throughout the system. The cause of such a condition is often hard to locate.

If the public supply is a direct pumping system, and the house is at the end of a main, we should say that the trouble is caused by the shock of the pumps. In this case, and, in fact, under the other conditions named, air chambers would doubtless be effective in overcoming the trouble.

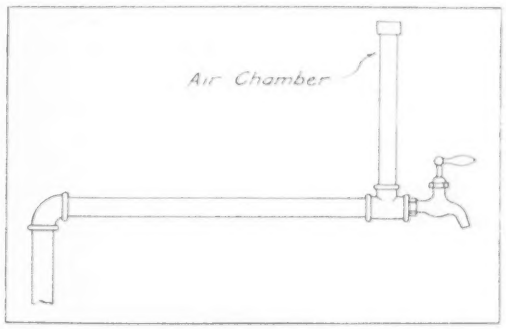

Fig. 2.

We do not believe the ordinary air chambers on supplies, such as mentioned by correspondent, and shown in Fig. 2, are very effective. They soon become water logged and useless, and can then be renewed only by removing the cap and draining the piping.

It would be a much more effective plan to air chamber the entire house as shown in Fig. 3. This air chamber can be made of 3 or 4-inch pipe, and can be quickly and easily renewed when waterlogged, by closing the stop and waste cock, and opening the pet cock at the top.

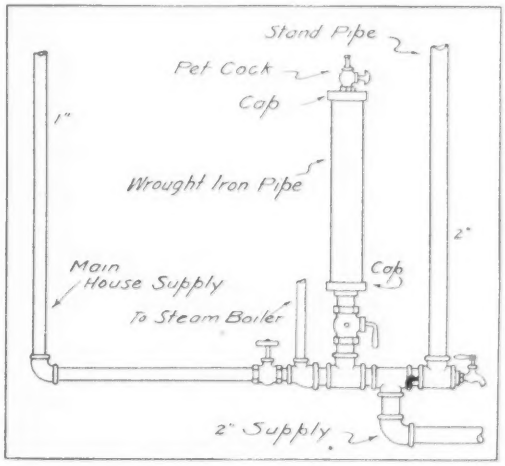

Fig. 3.

Before going to this expense, however, we would advise thorough repacking and possibly repairing of bibbs and ball cocks, as this is very often the cause of such troubles.

Elkhart, Ind.—Dreves Bros. of 108 State Street, have secured the contract for the installation of a modern plumbing system in the City Hall and Superior Court building, which is to be erected here.

Bay City, Mich.—The Ideal Plumbing Co., of this city, has secured the contract for plumbing in the new plant of the Kuhlman Electric Co., and Cory & Nichols, also of this city, will install the heating system.

New Jersey Master Plumbers in Convention

The Fourth Annual Convention of the State Association, Held at Trenton, N. J., a Great Success

WITH a record attendance and an exhibition of plumbing and heating goods on a scale never before attempted at a State meeting, the fourteenth annual convention of the New Jersey State Association of Master Plumbers held on Tuesday, Wednesday and Thursday, May 25, 26, 27 at Trenton took on the appearance and proportion of a national gathering.

Both the meetings and exhibit were held in the spacious Second Regiment Armory. The business sessions of the convention were conducted on Tuesday and Wednesday; but for three days the armory was the Mecca not only of the delegates but also of the citizens of Trenton, who were cordially invited to inspect the exhibit.

Tuesday Morning.

The meeting was opened Tuesday at 11 o'clock a. m. by President W. V. Mesler, of Morristown. Following the invocation by Rev. C. H. Elder, pastor of the Trinity Methodist Church, the delegates received a hearty welcome by James Bennett, president of the local association, and Mayor F. W. Donnelly. President Samuel Haverstick of the Chamber of Commerce also took a hand in welcoming the convention to Trenton.

L. A Menegaux, of Union Hill, referred to the death of Edson Garrabrant of Orange, past president of the Association, and asked the delegates to rise for a minute in respect of his memory.

Henry F. Baillet also eulogized the late past president, declaring that he lost a valued friend in Mr. Garrabrant's death.

Daniel Sisti, of Trenton, was appointed sergeant-at-arms of the convention. Following a partial roll call to determine a quorum the following committee appointments were announced by the chair:

Credentials Committee: E. M. Stirling, H. G. Krause and Frank Vreeland.

Auditing Committee: R. Koether, William Chesnut and Charles Zimmerman.

Resolution Committee: S. Wilson, J. J. Coppinger and E. Simpson.

The report of the legislative committee presented by Chairman Joseph A. Sproules of Jersey City was largely devoted to the success of the committee in securing the enactment of bill Number 1130, which provides for the separation of plumbing and heating work from general contracts on all state work. This was met with prolonged applause from the floor.

Mr. Menegaux then read an essay presented by John Campbell of Paterson entitled, "The Part Taken by the Practical Sanitarian."

Adjournment was taken at noon.

Tuesday Afternoon.

The reports of officers and committees were taken up when the convention reassembled for the second session. In the absence of Louis Maier, chairman of the Essay Committee, Mr. Baillet read the various essays presented. George Turner, of Asbury Park, reported in behalf of the delegates to the last National Convention.

The report of the Apprenticeship Committee recommended the adoption of the system of registration of apprentices in vogue in Newark.

Delegates and Guests in Attendance at the Fourteenth Annual Convention of the New Jersey State Association of Master Plumbers, Held at Trenton, N. J., May 25, 26 and 27, 1915.

An essay by John Karl, of Passaic, on "Industrial Education" was presented and received with thanks. Another essay by S. C. Fredericks, of Newark, on "Overflow," was then read.

"The Relation of Wholesalers and Retailers, Plumbers and Otherwise" was the subject of another essay.

John Groves, of Ocean City, presented a paper on "Sewage Disposal Methods Along the South Coast."

A. Selden Walker, Louis Maier and Mr. Warner were appointed a committee to represent the association at the funeral of the late past president, Edson Garrabrant, at Orange.

President Mesler's report referred to the successful passage of house bill 1130 and praised the work of the members of the Legislative Committee in this matter. A loss in membership of 207 was announced with regret; but it was pointed out that this was due to a condition over which the administration had no control.

Vice-Presidents L. A. Menegaux, Joseph A. Sproules and J. J. Turbett made verbal reports.

National State Vice-President W. J. Cross as well as Secretary W. F. Beck and Treasurer Geo. S. Aldous also presented reports of their work.

The books showed a balance of $466.74 in the treasury, after an expenditure during the year of $4,446.58.

Letters of sympathy were ordered sent to Louis Meier, who was detained at home on account of sickness in his family; to A. R. Milliney on the death of his wife; to C. E. Harrison, who was ill and unable to attend, and to Past President Geo. S. O'Neil, who lost a son recently.

The report of the Board of Trustees was received through W. E. Storms, Jr.

A letter from John Groves, of Ocean City, on the "Hazards of Subcontracting and the Existing Laws which work a Hardship on the Subcontractor," was read.

The meeting adjourned for the day at 4:45 o'clock.

Wednesday Morning.

The acceptance of the Auditing Committee's report and the appropriation of $100 for the Trenton Association to help defray the expense of the convention opened the meeting Wednesday morning. Henry F. Baillet read a paper on "Overhead Expense" and gave a blackboard demonstration of practical cost figuring.

The Resolution Committee presented a resolution on the death of Mr. Garrabrant, which was adopted and ordered sent to the Garrabrant family.

John Campbell, of Paterson, who was at the meeting in the capacity of representative of the newly organized Sanitary Engineers' Society of New Jersey, made formal announcement of the organization and explained the society's purposes.

A rising vote of thanks was extended Governor Feeder for his support in making bill 1130 law. His Excellency was advised of this by wire.

A letter from National President S. Louis Barnes, concerning the selection of Chicago for the National Convention was read.

C. F. McGuire, on behalf of his associates, invited the association to hold its next convention in Newark. The

At the New Jersey Convention.—From left to right, they are: Chas. Werner, R. Entwistle, J. J. Corcoran, John Anderson, Fred Scheer, J. A. Sproules and J. J. Coppinger.

selection of Newark was formally made later in the session.

Upon invitation of President Mesler, J. Hunter White, of Paterson, a past president of the association assumed the duties of chairman during the election of officers.

Election of Officers.

C. C. Hoffmeier, C. E. Harrison and E. M. Sterling constituted a board of elections. The election resulted in the following choice.

President, L. A. Menegaux, Union Hill; first vice-president, Joseph A. Sproules, Jersey City; second vice-president, John J. Turbett, Newark; third vice-president, J. H. Cadigan, Paterson; secretary, William F. Beck, Orange; treasurer, George S. Aldous, Passaic. Board of Trustees: H. J. Farrell, Camden; W. F. Cody, Trenton; David H. Moore, Atlantic City; national state vice-president, George Turner, Asbury Park.

Retiring president W. V. Mesler, President Menegaux

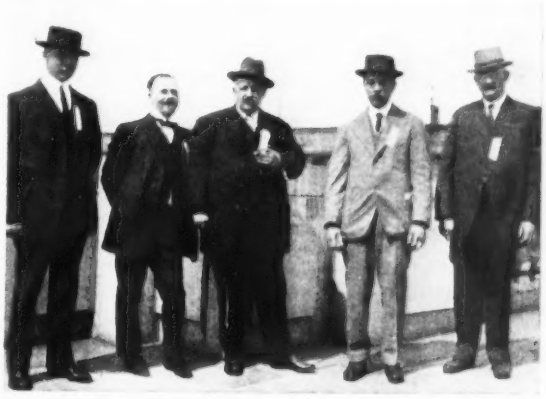

At the New Jersey Convention.—President W. V. Mesler and Some of the Delegates at the City Hall, in Trenton, N. J.

and national state Vice-President W. J. Cross will represent the state at the Chicago convention.

Votes of thanks to the retiring officers, the local association, the exhibitors and the trade press concluded the business of the convention and final adjournment was taken at 1 o'clock p. m.

Entertainments.

The entertainment furnished by the local association was elaborate and a special attraction for the ladies in the party. On Tuesday and Wednesday auto tours of the city to various places of historic and other interest were the order.

Tuesday, Wednesday and Thursday evenings there was dancing at the Armory, where the public was at all times welcome. On Wednesday evening an elaborate banquet was served in honor of the visiting delegates. National President S. Louis Barnes and National Secretary D. F. Durkin were present, both having arrived too late for the business sessions.

Exhibits.

The display of plumbing and heating goods was arranged on the exhibit floor, and was on a scale never before seen at a state convention.

The Lambertville Pottery Co., Lambertville, N. J., exhibited its "Non-Overflow" bowl. Its booth was in charge of Andrew Foltz, president of the company, and C. H. Kimble, the patentee of the bowl.

The Trenton Brass & Machine Co., of Trenton, N. J., had an attractive display of its specialties. R. N. Burket, E. L. Fine and W. J. Burket were at the booth.

W. B. Weber, F. C. Allen, W. G. Sine and A. King Atkins were at the well-appointed booth of the Trenton Potteries Co., of Trenton, N. J. Wm. Bapst looked in on Thursday.

John Maddock & Sons, of Trenton, N. J., exhibited some handsome hand-painted tile in connection with their pottery specialties. F. W. Bamford was in charge.

Ora C. Cox demonstrated the Mark die stock, made by the Mark Mfg. Co., of Chicago.

The Pierce, Butler & Pierce Mfg. Corporation, of Syra-

cuse, N. Y., had the Pierce down-draft boiler on display. At the booth were R. S. Auffort, Paul Dewees and E. H. Giles.

The Minneapolis Heat Regulator Co., Minneapolis, Minn., was represented by Frank Sprague, manager of the Syracuse office, who demonstrated the various models of heat regulators made by his company.

The display of hospital fixtures in the booth of the J. L. Mott Iron Works, of New York City, attracted considerable attention. George B. Howell, W. J. McCormick and E. C. Smith were in charge.

At the booth of the Woodward-Wanger Co., of Philadelphia, where the "W. W." specialties were on display, the delegates were presented with a caulking iron with the compliments of C. W. Wagner, J. E. Tatem, W. E. Grundy and George O'Brien.

The H. Mueller Mfg. Co., of Decatur, Ill., had an interesting exhibit in charge of W. F. McCarthy, of the Philadelphia office. Many of the company's specialties were shown under pressure.

The Borden Company, of Warren, O., was ably represented by Geo. W. Warner, who demonstrated the "Beaver" die stock.

The I. X. L. Pump & Mfg. Co., Philadelphia, had its anti-freezing and seat-action and automatic combinations on display. A. Gabell, Wm. Griffiths, Chas Fry and Joseph Hays were at the booth.

Robert G. Savill, William Lodge and John Doody volunteered all they knew about the "Swan's Neck" faucet, manufactured by Thomas Savill's Sons in Philadelphia.

W. F. Casey was kept busy explaining the merits of the Vogel frost-proof closet at the booth of Joseph A. Vogel Co., Wilmington, Del.

The Franklin compression stop and waste was demonstrated at the booth of Franklin Brass Mfg. Co., Long Island City, N. Y. F. G. Hirst was in charge here.

The National Radiator Co., Johnstown, Pa., featured the "Novus" boiler at its booth, where the delegates secured key chains and "fitters' guides" from either L. T. Jones or Chas. N. Tull.

The Trent Tile Co., Trenton, N. J., exhibited "tile for anywhere and everywhere" with replicas of tile installations in some notable buildings here and abroad. The booth was in charge of A. Lawshe, president; W. J. Jamieson, general manager, and J. L. Silvers.

Handy die stocks were demonstrated by W. W. Thorn at the booth of the Handy Mfg. Co., of Bridgeport, Conn.

Harry Rosenbaum, president of Standard Iron Works, of New York City, displayed his company's "Standard" portable vise bench, and distributed handy brass rules

Thatcher Furnace Co., of New York City, showed its line of boilers and ranges under the management of R. J. Miller and G. W. Taylor. Novelty paper weights were distributed.

Richardson & Boynton Co., of New York City, had on display its "Richardson" and "Perfect" boilers and furnaces. L. Ray Patten was at the booth.

Thomas W. Cooper had on display vacuum cleaners, boilers and radiators made by the American Radiator Co., of Chicago.

Crane Co., of Chicago, had an attractive display of chinaware and combinations, featuring the "Whale-bone-ite" seat. H. S. Officer, J. K. Law and S. C. Fish were in charge of the booth.

The Kaustine private sewage disposal system, made by the Kaustine Selling Co., of Trenton, attracted much attention. The company was represented by Frank B. Shalters.

The Glauber Brass Mfg. Co., of Cleveland, O., exhibited brass goods under the direction of L. Bernstein, at the booth of Bridgeman Bros. Co., of Philadelphia. The latter company, under C. P. Wilfong and C. M. Moore, featured enameled goods and the Penberthy Injector Co.'s plumbing specialties.

The Keystone Supply & Mfg. Co., Philadelphia, had a neat exhibit in charge of W. J. Hepburn and Harry Fife, who presented their visitors with souvenir ash-trays.

The "Inaudio" closet made by Camden Pottery Co., of Camden, N. J., and other goods were seen at the American Tin & Terne Plate Co's booth. William Robson was in charge.

Warren Balderston & Co., of Trenton, occupied the largest booth in the hall with a general line of fixtures and heating goods. B. J. Newell and L. N. Harris did the honors here and distributed serviceable leather letter cases.

Haines, Jones & Cadbury Co., of Philadelphia exhibited a varied line of enameled ware with some new fixtures which were demonstrated by O. W. Gleason, T. Taylor, Thos. Livesey, Geo. Kitson and Wm. Lodge.

Thomas Maddock's Sons Co., Trenton, N. J., featured the "Ariston" bowl and other vitreous china ware. A. M. Maddock, John Spicer, John Kelly, Joseph Sullivan and John Bitzer were in attendance.

The Exhibit of Thos. Maddock's Sons Co., of Trenton, N. J., at the New Jersey Master Plumbers' Convention, in that City. From left to right, the Gentlemen in the Picture are: John Spicer, John Bitzer and Joseph Sullivan.

Fleck Bros. Co., of Philadelphia, exhibited the Neptune water supply system and plumbing specialties. Edw. Wilson was in charge of the booth.

W. H. Weinacht was in charge of a general line of supplies exhibited by Walls, Owen & Stambach Co., of Philadelphia.

William J. Meegan, of Philadelphia, personally represented his house at an attractive exhibit.

The Trenton Association of Master Plumbers exhibited antique fixtures and tools which were quite in contrast with the modern equipment displayed about the hall.

T. Munroe Dobbins, president of the Camden Pottery Co., Camden, was a visitor to the convention on Wednesday.

A. N. Passman, of H. W. Johns-Manville Co., New York City, was seen in the hall on Thursday

Thomas J. Berkstresser, of Atlantic City, Camden and Bar Harbor, found time to greet his old friends.

The Wolverine Brass Works, of Grand Rapids, Mich., was represented by F. M. Brennan.

DeWitt Cook, of the W. V. Egbert Co., of Newark, N. J., was much in evidence throughout the convention.

The Monument Pottery Co., of Trenton, exhibited its "Vitrico" and other sanitary ware. Its booth was in charge of G. E. Hoffman, F. A. Goeke, J. M. Kreger, R. J. Goeke, and W. Gowdy.

Bareham & Saunders, of Rochester, N. Y., exhibited their price guide books.

The National District Heating Association

The Seventh Annual Convention Held at the Hotel Sherman, Chicago, June 1, 2 and 3, 1915, with a Good Attendance

THE seventh annual convention of the National District Heating Association was held June 1st, 2nd and 3rd, at the Hotel Sherman, Chicago. Representative men of the trade were in attendance from the principal cities of the country.

Tuesday Morning Session.

Following the opening of the convention at 11 a. m. the Hon. Harry Miller, prosecuting attorney of Chicago, delivered the address of welcome, greeting the delegates on behalf of Mayor Thompson, who was unable to be present. Attorney Miller declared that he was exceedingly glad te deliver the key of the city to the delegates, provided they were not to "B. t. u." which, when interpreted, means: "Be Too Unruly."

The response to the address of welcome was delivered by H. B. Brydon, of Chicago.

President H. R. Wetherell, of the association, then proceeded to the reading of his annual address, which was in part as follows:

"Gentlemen, I believe the day has come when we should not look on steam heating as a by-product of the electric business, which should be given away at cost, or at a loss to secure the latter. I believe that, with the use of the modern heating systems and the proper attention and engineering, steam can be sold by meter rate at a cost which will be attractive to the customer and also pay a good revenue to the heating company. It is up to this association to bring out these facts and prove that this is true. As I have said many times before, if the heating departments received the same attention and enginering as our electric departments there would be a big change in the results obtained from same.

"The coming of the Public Service Commission is also a good thing for the district heating company. The ruling of the Public Service Commission requires the district heating company to sell steam for the published rates only, which eliminates the old practice of making special rates and giving steam service at a very low cost in order to secure the electric business. Contracts of this sort are a great many times the cause for the heating department being operated at a loss.

"The day has also come when the public service company should co-operate with the customer and break away from the old method of keeping the customer in the dark. By this I mean that we should not hesistate to show them our records and let them know what the other fellow is paying. We should also show the customer every possible means of regulation, in order that he may cut his bill to the minimum."

The report of the secretary-treasurer, which was read by D. L. Gaskill, showed the organization to be in a healthy condition, with a balance of $1,052.69 on hand. Secretary Gaskill declared that all transactions of the association had been successfully carried out during the past year, and that never before has the financial condition of the organization been in a more satisfactory state, which fact he attributed largely to the thorough loyalty of the members of the association. Following the secretary-treasurer's report, that of the auditing committee was then read.

President Wetherell read a communication from Lieut. A. Beaurrienne, of Paris, France, a member of the association, and now in the French army. The French member stated that the particular heating problems, which are confronting him just now, are contained in bursting shells and bombs in and about the trenches. He thanked the association for the courtesies shown him last year when he was a delegate at the convention. Upon motion it was voted to send the lieutenant an acknowledgment and to extend to him the sincere well wishes of the association.

A list of new applications for membership was read, and upon motion the president was directed to cast one ballot for their admission into the association.

President Wetherell appointed the following as members of the nominating committee: E. L. Wilder, Chicago; C. H. Spiehlman, Dayton, and Fred B. Orr, Chicago.

The report of the Station Record Committee, which was read by A. Bigg, of Detroit, elicited much interest and considerable discussion.

Tuesday Afternoon Session.

An address by J. F. Gilchrist, vice-president of the Commonwealth Edison Co., of Chicago, was the feature of the afternoon session. Mr. Gilchrist spoke interestingly of the possibilities of the steam heating business, and said that it has impressed itself upon the company more and more, and that the concern was convinced that steam had still greater growth and development awaiting it.

The report of the Public Policy Committee was read by Secretary D. L. Gaskill. Copies of these reports, which had been printed, were distributed among the members of the association. Following the reading of the report an address upon the subject was delivered by Walter A. Shaw, a member of the Public Utilities Committee of Illinois.

Ladies Entertained.

On Tuesday afternoon the wives and daughters of the members were entertained at a musicale and card party given at the Hotel Sherman, and during the evening they were accompanied by members to the Majestic theater, where a very excellent bill of vaudeville was offered for their approval and enjoyment.

Wednesday Morning Session.

The convention opened at 10 o'clock, and the first order of business was the report of the Committee on Underground Construction, which was read by H. A. Woodward, of Indianapolis. Discussions followed the reading of this able report.

An interesting paper on "Operating Experiences with Bleeder Type Turbines," was read by F. W. Laas, chief engineer of the Iowa Railway & Light Co., of Cedar Rapids, Ia., and it also was followed by a discussion.

Wednesday Afternoon Session.

The afternoon meeting opened with the reading of the report of the Educational Committee, after which followed a general discussion on vital points contained in the report. Much interest was shown in a discussion on kitchen apparatus and steam tables, and steam in laundries. Upon motion it was voted that the proceedings of the association should be copyrighted.

C. F. Oehlman, of Denver, read an instructive paper on "The Commercial End of the Heating Business," which evoked much interest and discussion.

Election of Officers.

It was moved and seconded that the following officers presented to the convention by the Nominating Commit-

tee, be elected by the casting of one ballot by the secretary:

President, Davis S. Boyden, Boston; first vice-president, Byron T. Gifford, Grand Rapids; second vice-president, George W. Martin, New York; third vice-president, William S. Monroe, Chicago; secretary-treasurer, D. L. Gaskill, Greenville, O. Members of the Executive Committee: Thos. Donahue, Lafayette, Ind., and C. F. Oehlman, of Denver, Colo.

Banquet Wednesday Evening.

On Wednesday evening at 6:30 o'clock a banquet was held in the Crystal Room of the Hotel Sherman, with over two hundred delegates, their ladies and other guests participating. A delicious menu was served in attractive style, interspersed with an excellent musical program. Following the banquet a professional magician amused and mystified the guests in the exhibit hall, after which all repaired to the ball room, where dancing was the order of the evening.

To the local entertainment committee of the association much credit is due for its splendid handling of the entertainment features, and especially for its considerate hospitality in the reception of the visiting ladies of the convention, in which shopping trips, automobile tours about the city, and a lake excursion on the United States Training Ship, "Isle de la Luzon," figured as special features.

The members of the committee, all of Chicago, were: Harold Almert, chairman; Fred B. Orr, L. S. Shaw, Oliver H. Hogue, George H. Jones, John G. Learned, J. L. Hecht, Mike S. Hart, Charles H. Fiske and H. B. Brydon.

Thursday Morning Session.

The morning proceedings opened with a paper on "The Hot Water System at the Grand Central Terminal of New York," which was read by W. G. Carlton, engineer. This valuable paper was discussed and favorably commented upon by the members.

Much interest was shown by the convention in the masterly report of the Station Operating Committee, which was read by B. T. Gifford, of the American Public Utilities Co., Grand Rapids, Mich. Various angles of this report was discussed in session at considerable length.

Thursday Afternoon Session.

The afternoon meeting opened with a continuance of the discussion on the points of interest in Mr. Carlton's paper, and the report of the Station Operating Committee. This discussion was prolonged until a late hour in the afternoon.

The question of the desirability of establishing an association bulletin which should be strictly constructive and devoted to the interests of the organization was taken up and discussed, and then the motion was made and adopted that the suggestion of publishing a quarterly bulletin of educational information should be left to the best judgment of the executive committee of the association. It was explained by Secretary Gaskill that it was not intended that the bulletin should in any way take the place of the trade papers, or be the means of exploiting the ideas of any particular person.

A resolution was adopted thanking the members of the local committee for the splendid hospitality which its members accorded the delegates and the ladies during their stay in the city. Resolutions were also passed extending thanks to the exhibitors for their presence and interest in the convention, and to the management of the Hotel Sherman for the courtesies and privileges given those attending the convention.

The question of securing reduced insurance rates for buildings heated by central station steam service was referred to the Public Policy Committee, it being suggested that this body could take up the matter with the Insurance Rate Fixing Bureau, which is located in Chicago.

The selection of the meeting place of the association in 1916 was left to the decision of the executive committee, and its choice of a city will be announced early next fall.

Among the Exhibitors.

Adjoining the convention hall at the Hotel Sherman the array of exhibits presented an interesting and attractive display. Twenty-one concerns were represented in the commodious space allotted the exhibitors. Among the latter were:

The Central Station Steam Co., of Detroit, which was represented by F. A. Green, J. V. Redfield and W. R. Owen, who exhibited condensation meters and expansion joints.

The Republic Flow Meters Co., of Chicago, was represented by D. J. Cunningham, who showed visitors the concern's specialties for central station heating plants.

National Air Cell Covering Co., of Brooklyn, was represented by G. Clarence Hall, who exhibited the company's line of Pyro-bestos pipe covering.

Cannelton Sewer Pipe Co., of Cannelton, Ind., was represented by C. A. Clemens, who showed visitors the firm's fire clay conduit.

The Illinois Engineering Co., Chicago, was represented by R. L. Gifford, J. C. Matchett, F. Van Inwagen. These gentlemen demonstrated the merits of the Gifford automatic vacuum system.

Tyler Underground Heating System, Pittsburgh, Pa., was represented by E. B. Tyler, E. M. Hathaway, W. K. King, John R. Lord, John Ward and George J. Schmidt. The company exhibited expansion joints and underground insulation.

Michigan Pipe Co., Bay City, Mich., was represented by H. B. Smith, Jr., and F. J. Justice, who exhibited wood casings for underground heating mains.

A. Wyckoff & Son Co., Elmira, N. Y, was represented by E. M. Peters, E. E. Peters, and W. W. Orrison. They exhibited cross sections of the Wyckoff improved steam pipe covering.

H. W. Johns-Manville Co., New York, was represented by H. F. Newell, H. W. Frantz and George W. Becker. The company exhibited fibre conduit and packings.

The Armstrong Cork Co., Pittsburgh, Pa., was represented by W. A. Speelman, G. G. Oetting, and E. N. Heidkamp. They showed visitors pipe and boiler insulation.

Boylston Steam Specialty Co., Chicago, was represented by John Boylston, John Boylston, Jr., and H. J. Richter. Their exhibit consisted of steam specialties.

Westinghouse Electric & Mfg. Co., of Pittsburgh, was represented by J. C. Cleary and F. S. Shaw, who presided over a booth decorated with photographs of heating specialties and installations.

The Consolidated Engineering Co., Chicago, was represented by Byron E. Van Auken, Carl Van Auken, H. Tyler Kay, John F. Hale and A. A. Probst. These hale and popular gentlemen showed interested groups of visitors their Thermograde modulation system of heating.

Detroit Lubricator Co., Detroit, was represented by R. H. Lindman, who exhibited the company's line of packless radiator valves and the Detroit Multi-Port graduated vapor radiator valves.

The V. D. Anderson Co., Cleveland, O., was represented by Chas. H. Fiske and Leslie B. Fiske. Their exhibit consisted of steam traps and specialties.

American Radiator Co., Chicago, was represented by Frank C. Reeder, C. J. Swan, A. K. Root and E. A. May.

These gentlemen showed visitors the merits of the Sylphon temperature regulator.

American District Steam Co., North Tonawanda, N. Y., was represented by C. R. Bishop, W. H. Wells, A. A. Kimbraugh, Loyd Howell, R. C. Holley, H. C. Austin, J. G. De Remer, E. M. Bendure and C. A. Dudley. The company exhibited its line of steam pipe casing and district heating specialties.

The G. M. Davis Regulator Co., Chicago, was represented by George C. Davis and J. C. Kinsley, who exhibited the company's traps and steam specialties.

J. C. Hornung, of Chicago, exhibited heating specialties, assisted by D. T. Wallace, also of Chicago.

Jenkins Bros., New York, was represented by H. B. McLelland and James A. Donnelly. The company exhibited an interesting line of valves and the Positive Differential system.

The Powers Regulator Co., Chicago, was represented by M. O. Snediker and I. Keller, who demonstrated the merits of the Powers Hydro-Regulator.

June 7 and 8, 1915.—Georgia Master Plumbers' Association, on St. Simons Island.

June 16, 1915.—Midsummer meeting of the Central Supply Association, in Chicago, with headquarters at Auditorium Hotel.

June 16, 1915.—Mid-summer meeting of the Eastern Supply Association, at Atlantic City, N. J., with headquarters at the Strand Hotel.

June 21-24, 1915.—The twenty-seventh annual convention of the National Association of Master Steam and Hot Water Fitters, at Milwaukee, Wis.

June 28 and 29, 1915.—The Master Plumbers' Association of California, at San Francisco.

July 13, 14 and 15, 1915.—The thirty-third annual convention of the National Association of Master Plumbers, in Chicago, with headquarters at the Congress Hotel and Annex.

August 9, 10 and 11, 1915.—American Society of Sanitary Engineering, at San Francisco, Cal.

September 16, 17 and 18, 1915.—The American Society of Heating and Ventilating Engineers, at San Francisco, Cal.

GREAT INTEREST IN EXHIBIT FEATURE OF CONVENTION OF N. A. M. P.

On account of the extraordinarily large attendance anticipated at the forthcoming National Convention of Master Plumbers in Chicago, July 13th, 14th and 15th, considerable interest is being displayed by manufacturers and dealers in plumbing and heating supplies and specialties in the exhibit of plumbing and heating material, appliances and tools, which will be conducted under the auspices of the National Association.

This exhibit will have an educational value to the trade, and it will also be open to the public. It will be held at the National headquarters in the Congress Hotel and Annex, in the Elizabethan and German Rooms, as previously announced. The fact that both exhibit rooms are in the building where the sessions of the convention will be held and thus easily accessible to the delegates at all times, gives this feature an added value from the viewpoint of the exhibitor.

Many of the choice spaces have already been reserved and inquiries and orders are being daily received for space. As the date of the convention is but a few short weeks distant, firms contemplating the renting of space should at once get in touch with the Chairman of the Committee on Exhibits, C. J. Herbert, 718 Schiller Building, Chicago.

THE MILWAUKEE CONVENTION OF THE NATIONAL ASSOCIATION OF MASTER STEAM AND HOT WATER FITTERS.

Elaborate arrangements are nearing completion for the twenty-seventh annual convention of the National Association of Master Steam and Hot Water Fitters, which is to be held in Milwaukee, June 21, 22, 23 and 24, 1915, as previously announced in these columns. A large attendance is expected, with every state in the Union represented. The headquarters will be established at the Hotel Wisconsin, and ample preparations have been made for the entertainment of ladies accompanying delegates and guests to the convention. The entertainments include bowling and golf tournaments, auto rides and a lake trip.

Practically every member of the Milwaukee Association has taken a hand in the elaborate arrangements for the convention. The committee on general arrangements is composed as follows: Edmund Grassler, Fred Kaufman, Frank Downey, Hugo Franke, I. Harriman, Emil Henoch, Albert Luebke and F. H. Meadows, all of Milwaukee. The committee on finance consists of: Edmund Grassler, Frank Downey and F. H. Meadows. The committee on entertainment for ladies is composed as follows: William LaCompte and J. B. Garfield, of New York, members ex officio, assisted by I. Harriman, Hugo Franke and Frank Downey, of Milwaukee. The committee on automobiles comprises Fred Kaufman, Emil Henoch and Albert Luebke, of Milwaukee.

These committees have been making preparations for the convention for the last three months, and they report everything nearly ready for action. On page 21 of this week's issue will be found a reproduction of a photograph of all the members of the Milwaukee Association, every one of whom has taken upon himself the duty of doing everything possible to entertain the visiting delegates, guests and ladies. It, therefore, goes without saying that the convention will be a pleasant success.

From the headquarters at New York City, President John T. Bradley, of St. Louis, has just issued a call to all the members of the association, urging them to attend this convention, making it one of the most successful in the association's history. "With the return to better or normal conditions," he says, "we are certain to have problems to meet of more or less importance. Your best friend and ally is the Association. Strengthen it and encourage the officers by your attendance." Mr. Bradley also urges the members to bring their associates with them to the convention.

Case Against M. J. Orr Dropped by Government.

M. J. Orr, of the Orr & Graves Co., plumbing and heating contractors, of Sioux City, Ia., who was charged in the United States Court with perjury in connection with the conspiracy trial in Des Moines, Ia., has just received notice that the charge against him has been dismissed upon recommendation of the Department of Justice in Washington.

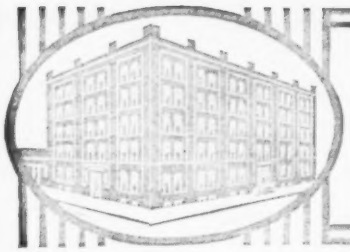

Among the Wholesalers and Manufacturers

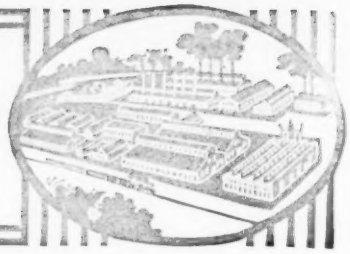

MOVES ITS EASTERN OFFICE.

The Lavigne Mfg. Co., of Detroit, Mich., has moved its eastern office to the Columbia Trust Co. building at 358 Fifth Avenue, New York City. The office is in charge of H. R. Watson.

SECURES EXCLUSIVE SALES RIGHTS.

Consolidated Engineering Co., Jackson and Canal Streets, Chicago, has secured the exclusive sales rights of the Kinealy thermostatic valve and the Kinealy air-conditioning apparatus.

BUILDS ADDITION TO WAREHOUSE.

The John Wilfert Co., of 258 Broadway, New York City, has just erected a new addition to its warehouse in Brooklyn, N. Y. The new structure is one story, 75x30 ft., and will be used for the storage of pipe.

OPENS BRANCH AT BINGHAMTON, N. Y.

Charles Millar & Son Co., of Utica, N. Y., has opened a branch of its business in Binghamton, N. Y. The new branch comprises a large store and warehouse where it is the intention of the company to carry a complete stock of plumbing and heating supplies.

VACUUM HEATING INTERESTS TO ORGANIZE.

An association of vacuum heating interests, it is understood, is about to be formed. It will be both educational and commercial and in the interest of the vacuum heating field. Two meetings have been held in New York City, and at the next, which will be held shortly, a permanent organization will be effected.

DAYTON MFG. CO. BUYS MANUFACTURING RIGHTS.

The Dayton Mfg. Co., of Dayton, O., has purchased from the McCormick Mfg. Co., of that city, the rights to manufacture and sell the "Ohio-M" instantaneous water heaters, whose construction was invented by R. J. Hutchins some years ago. The Dayton Mfg. Co.'s plant is well-equipped for the manufacture of this heater.

NEW CRANE CO. BRANCH AT BUFFALO.

Crane Co. has succeeded to the business of the Zander Plumbing Supply Co., at 81 Broadway, Buffalo, N. Y. This addition makes the total number of Crane Co.'s branch houses now in operation forty-four. The Buffalo branch, like others, will carry Crane goods, valves and fittings, steam fitting and plumbing supplies. F. W. Zander, formerly president of the Zander company, is manager of this branch, and Roy Sowersby, for many years with Crane Co. in Chicago, will be his assistant.

CENTRAL TRADE GOLF ASSOCIATION'S SPRING TOURNAMENT.

The Central Trade Golf Association will hold its regular spring tournament on the links of the Pittsburgh Country Club, on Tuesday, June 8th. The events of the day are: Morning Competition, 18-Hole Medal Play handicaps; Afternoon Competition, 18-Hole Medal Play handicaps. The players will be divided as follows: Class A, handicaps up to and including 15; Class B, handicaps 16 and above. Players may select their own partners, but a Class A player must play with a Class B player, or be assigned a partner by the tournament committee. Players not arriving before 2 p. m. can compete in afternoon competition only. Six prizes have been donated for this tournament. The officers of the association are: President, J. K. Frye; secretary-treasurer, W. B. Bryar, both of Pittsburgh; tournament committee, Joseph A. Weldon, T. R. Kenny and E. H. Eggleston, Jr., all of Pittsburgh, Pa.

EASTERN TRADE GOLF MEET HAS RECORD ATTENDANCE.

The spring tournament of the Eastern Trade Golf Association, opening the 1915 season, was held at Oakland Golf Club, Bay Side, Long Island, on Wednesday, May 26th. The day was marked by a record attendance, forty-six members having entered the play.

The events were determined in an eighteen-hole medal play in the morning and a best ball foursome after luncheon.

The medal play sterling silver cup was won by C. C. Hale. W. G. LeCompte took second prize, a set of sterling silver military hair brushes, and G. H. Chasmar received a mahogany and silver cigarette humidor as third prize in the same event.

The special event for players who never won a prize went to Farnham Yardley, a silver cup.

The match game against bogey event, which carried a handsome golf bag as prize, presented by James D. Erskine, assistant general sales manager of American Radiator Co., went to W. G. Titus.

M. E. Conran and P. H. Seward carried off the best ball foursome, and two handsome silver carving sets as prizes.

Dinner at the club house in the evening completed the day's pleasure.

President A. S. Armagnac presented the prizes to the winners, and C. N. Brizse, who was present for the first time in three years, addressed the gathering in his usual accomplished fashion.

In the "gallery" attendance were H. B. Gombers, L. H. Quakenboss, who secured the course for the meet, and James D. Erskine. There was some talk of holding the

summer meet at Arcolla Country Club, near Paterson, N. J. The plays in detail follow:

Morning Play.—18-Hole Medal Play Handicap.

Players	Out	In	Total	Handicap	Net
C. C. Hale	44	46	90	14	76
W. G. LeCompte	59	54	113	36	77
M. E. Conran	57	55	112	34	78
G. H. Chasmar	40	44	84	5	79
Farnham Yardley	46	53	99	20	79
W. G. Titus	46	47	93	14	79
J. M. Heatherton	57	60	117	36	81
J. B. Garfield	42	42	84	0	84
E. C. Molby	44	47	91	7	84
W. H. Burnett	45	48	93	9	84
C. N. Brizse	50	54	104	20	84
E. S. Aitkin	49	54	103	17	86
R. J. Hauxwell	50	49	99	12	87
S. Roberts	46	47	93	5	88
C. W. Tenbroeck	52	58	110	22	88
F. C. Jennings	44	44	88	0	88
A. S. Armagnac	49	53	102	14	88
E. E. Gano	51	53	104	16	88
E. J. Hughes	53	56	109	20	89
W. W. Hubbard	53	57	110	20	90
R. B. Hunt	51	53	104	14	90
W. F. Whitmore	45	49	94	4	90
P. H. Seward	52	62	114	24	90
Frank J. Oliver	50	53	103	12	91
O. E. Goldschmidt	53	58	111	20	91
Conway Kiewitz	58	69	127	36	91
W. L. Fleisher	52	56	108	15	93
F. F. Cooper	57	56	113	20	93
W. B. Lasher	50	59	109	16	93
L. Moore	56	58	114	20	94
J. J. Blackmore	54	60	114	20	94
Geo. M. Scott	55	60	115	20	95
J. A. Donnelly	62	70	132	36	96
A. H. Ross	64	66	130	33	97
J. J. McKee	76	57	133	36	97
D. H. Roney	57	63	120	22	98
F. A. Boardman	51	67	118	20	98
T. E. Oliver	56	53	109	10	99
B. I. Ashmun	53	58	111	12	99
G. E. Sly	54	57	111	12	99
Geo. Keenan	55	65	120	20	100
W. M. Cosgrove	61	71	132	32	100
J. E. Rutzler	63	71	134	33	101
Joseph Geoghegan	67	70	137	36	101
Chas. S. Wood	54	70	124	20	104
Wm. T. Gilmour	62	68	130	24	106
Geo. W. Pierpont	55	71	126	20	106

Afternoon Play.—Best-Ball Foursome.

Players	Out	In	Total	Handicap	Net
Conran and Seward	46	49	95	24	71
Hauxwell and Roney	36	48	84	12	72
Goldschmidt and Brizse	44	49	93	20	73
Geoghegan and Le Compte	51	58	109	36	73
Hale and Titus	42	49	91	14	77
Chasmar and Fleisher	37	47	84	5	79
Sly and Hunt	44	47	91	12	79
Armagnac and T. E. Oliver	38	52	90	10	80
Gano and Keenan	47	49	96	16	80
McKee and Geoghegan	53	63	116	36	80
Hughes and Cooper	49	53	102	20	82
Hubbard and Wood	51	51	102	20	82
Ross and Rutzler	56	59	115	33	82
Jennings and F. J. Oliver	39	44	83	0	83
Tenbroeck and Jennings	41	42	83	0	83
Gilmour and Boardman	50	53	103	20	83
Molby and Roberts	43	45	88	5	83
Scott and Moore	51	53	104	20	84
Garfield and Brizse	42	43	85	0	85
Lasher and Whitmore	39	50	89	4	85
Burnett and Cosgrove	47	49	96	9	87
Aitkin and Heatherton	51	54	105	17	88
Blackmore and Pierpont	52	63	115	15	100
Donnelly and Kiewitz	60	76	136	36	100

Harry Derr, Sacramento, Cal., has been employed by the city to look after the shipment of materials from eastern points for the new water system. Altogether, five hundred carloads of pipes, valves and accessories will be required. Orders for these will soon be placed by Shaw, Batcher & Co., of Sacramento.

FAMOUS SPEAKERS TO ADDRESS CHICAGO CONVENTION OF ASSOCIATED ADVERTISING CLUBS.

Chicago will be the scene of the eleventh annual convention of the Associated Advertising Clubs of the World which meets June 20 to 24. This great gathering of the dynamos of the business world to discuss common problems and to advance the banner of truth in advertising promises to hold a unique place in the events of the year. President Wilson, war conditions permitting, will head the list of speakers. Hon. William Jennings Bryan, John H. Fahey, president of the Chamber of Commerce of the United States, Henry Watterson, George Horace Lorimer, editor of the "Saturday Evening Post," and Arthur Brisbane are among others of national prominence who are to address the sessions. On the Sunday preceding the formal opening of the convention, fifty business men of country wide reputation will deliver lay sermons in Chicago churches. New features include a conference of the teachers of advertising and another of the secretaries of advertising clubs. Departmental meetings of men in the several fields of work give opportunity for a discussion of the problems of various phases of advertising, an arrangement which reflects the new freedom in business. Amusements include a list of social functions for the ladies, a Gridiron Show to be staged by one hundred and fifty Chicago men, lake and automobile trips. At present, a whirlwind campaign is being waged by advertising clubs in an effort to be well represented at this convention.

NEW MEMBERS OF THE AMERICAN SOCIETY OF HEATING AND VENTILATING ENGINEERS.

Secretary J. J. Blackmore, of the American Society of Heating and Ventilating Engineers, has just issued a bulletin announcing the election to membership in the society of the following gentlemen in the grades indicated:

Members.

Alfred D. Alexander, Bessemer Building, Pittsburgh, Pa.

Orrie H. Allinson, Jobstown, N. J.

George E. Black, Parliament Buildings, Toronto, Ont.

George Boon, 1708 Arch Street, Philadelphia.

John H. Brown, Public Works Dept., Winnipeg, Man.

Clyde W. Colby, 464 Spitzer Building, Toledo, Ohio.

Jesse Coogan, 404 State Street, Salt Lake City, Utah.

Linwood B. Cornell, 88 Union Avenue, Portland, Ore.

Arthur P. Goldsmith, 108 South 18th Street, Philadelphia.

Irwin F. Grumbein, 785 Drexel Building, Philadelphia.

Edward M. Harrigan, 231 First Street, Detroit, Mich.

Laurence H. Henschen, 109 Bluff Street, Joliet, Ill.

Donald B. Howard, Des Moines, Ia.

Herman D. Jackes, 278 Franklin Street, Bloomfield, N. J.

Otto J. Juttner, 434 Jefferson Street, Milwaukee, Wis.

Charles W. Kimball, 6 Beacon Street, Boston, Mass.

Walter Klie, 1113 Bolivar Road, Cleveland, Ohio.

Nicholas J. Mathey, Le Mars, Ia.

Edward T. Murphy, 734 Real Estate Trust Building, Philadelphia.

George B. Nichols, State Capitol, Albany, N. Y.

Lee Nusbaum, 1119 North Howard Street, Philadelphia.

George T. Palmer, City College, 139th Street, New York City.

A. J. Purcell, P. O. Box 728, Little Rock, Ark., advanced from Associate Membership.

Samuel F. Richards, 1008 Mutual Assurance Building, Richmond, Va.

C. M. Ripley, 15 West 38th Street, New York City.

Samuel F. Smith, 4425 Euclid Avenue, Cleveland, Ohio.

Charles W. Tholen, 821 Plymouth Building, Minneapolis, Minn.

Louis S. Thomason, 353 East 14th Street, Brooklyn, N. Y.

William H. Timm, 305 Abbott Building, Philadelphia.

R. H. Trane, La Crosse, Wis.

Louis H. Tripp, 1729 New York Avenue, N. W., Washington, D. C.

Herbert R. Voelcker, 506 Y. M. C. A. Building, Houston, Tex.

J. Walter Williams, 213 East Seneca Street, Ithaca, N. Y.

Associate Members.

Samuel A. Armstrong, Parliament Bldgs., Toronto, Ont.

Maxwell F. Gilbert, 1342 Arch Street, Philadelphia.

Frank P. Keeney, 445 Plymouth Court, Chicago.

Neal W. Taplin, 123 Liberty Street, Grand Rapids, Mich.

Junior Members.

Morris Klaus, 1412 Prospect Avenue, Bronx.

G. Richard Ludlow, 123 Cluster Street, Mt. Vernon, N. Y.

Leon L. Munier, 31 Zabriskie Street, Jersey City, N. J.

William E. V. Shaw, 750 Summit Avenue, Milwaukee, Wis.

Personal Mention

He is a celebrated pedestrian, who is on his way—not to Dublin Bay—but to Van Buren Street, when he's in Chicago. He not only shines eminently as a pedestrian,

R. H. Van Buren, President and Treasurer of the Morency-Van Buren Mfg. Co., of Sturgis, Mich.

but as a motorist as well, and so much so that he would startle his presidential namesake, Martin Van Buren, if he came back. Little did the latter gentleman suspect, back there in the early days of the republic, that a namesake of his would be "speeding it" up in a swift motor car instead of a slow stage coach. Old Martin, esteemed and intelligent gentleman though he was, no doubt thought that the vehicle of the future would probably be a highly improved stage coach drawn by fifty horses instead of six. Fancy the utter amazement that would strike him if he were to come back and see his namesake, R. H. Van Buren, president and treasurer of the Morency-Van Buren Mfg. Co., of Sturgis, Mich., riding like the night wind in a high-power and high-geared auto of the latest design. "Van Buren" is a distinguished cognomen, which it is an honor to bear, and R. H. has for years borne it with becoming credit as a manufacturer of plumbers' brass goods, a fact which many men in the trade will testify to.

Albert Webb, manager of the Standard Mfg. Co., of Cleveland, O., was in Chicago this week on a business trip.

John R. Bly, Jr., representative for the Pittsburgh Water Heater Co., has recently been transferred from Chicago to the Pittsburgh district.

A. C. De Voe, treasurer of the Seattle Plumbing Supply Co., of Seattle, Wash., passed through Chicago this week on his return from the East, where he visited several manufacturing centers.

B. O. Tilden, of the American Sanitary Works, New York City, spent a few days in Chicago this week on his return from San Francisco, where he visited the Panama-Pacific International Exposition.

J. H. McElroy, of Billings, Mont., president of the Montana Master Plumbers' Association, was in Chicago this week on his return from Grand Rapids, Mich., where he was called on account of the death of his mother.

Joseph Hayes, for the past eight years with Thomas Savill's Sons, of Philadelphia, and more recently with the I. X. L. Pump & Mfg. Co., of that city, has joined the sales force of the United Brass Mfg. Co., of Cleveland, O., and will cover the Philadelphia territory.

James V. Johnson, better known to his many friends as "Uncle Jim," has recently retired from active service with the Beaton & Corbin Mfg. Co., of Southington, Conn., having been with this concern for twenty-one years, during which time he has helped to make the "B. & C." floor and ceiling plates known the world over. Mr. Johnson is a veteran of the Civil war, and served in Company E, Twentieth Regiment Connecticut Volunteers. He and his sister are the oldest living twins in Connecticut. A handsome gold mounted ebony cane, appropriately engraved, was presented to Mr. Johnson by the Beaton & Corbin Mfg. Co. as a token of its appreciation of his faithful service, and the many friends of "Uncle Jim" join with this company in wishing him many years of continued health and happiness.

James V. Johnson.

Doubtful.

"Of course I don't wish to put any obstacles in the way of your getting married," a mistress said to her servant, "but I wish it were possible for you to postpone it until I get another maid."

"Well, mum," Mary Ann replied, "I 'ardly think I know 'im well enough to arsk 'im to wait."—London Standard.

A NEW VALVE CATALOGUE.

The accompanying cut shows a miniature reproduction of the front cover of a neat catalogue just issued by the Marsh Valve Co., of Erie, Pa. This catalogue illustrates and describes the "Marsh" union bonnet angle radiator valves, corner offset valves, gate valves, etc. In the foreword to this catalogue the company states that "these valves are particularly adapted for use in schools and public buildings, because in valves for this class of work, on account of harder service, it is necessary to remove the bonnet for the purpose of removing disks more frequently than for apartment and private house heating. In assembling these valves no white lead or cement is used to seal same, and the union nut being easily removed makes it a simple matter to remove the bonnet without disfiguring or destroying same in order to renew the lower disc." Parties interested in these products can secure this catalogue from the above-named company on request, mentioning "Domestic Engineering."

"RELIABLE" VACUUM AND VACU-VAPOR HEATING CATALOGUE.

The Bishop-Babcock-Becker Co., of Cleveland, O., has just issued a valuable and attractive catalogue entitled the "Reliable" Vacuum and Vacu-Vapor Heating Equipment, the front cover of which is shown in the accompanying illustration. This catalogue contains a complete description of the "Reliable" heating equipment accompanied by many illustrations, and the matter is so arranged that the operation of the various heating specialties will be easily understood, not only by the heating contractor, steam fitter and architect, but by the prospective builder and layman as well. Some of the most interesting chapters are entitled as follows: "What Vacuum Heating Is, containing detailed description of the operation of the three styles of the 'Reliable' vacuum heating equipment, the air line, return line and vacu-vapor; 'Reliable' Valves; 'Reliable' Electric Vacuum Pumps; the new Vacu-Graduate Packless Radiator Valve, and the new Vacu-Vapor Vent Valve." The catalogue consists of 98 pages, 5 by 8 inches in size, and parties interested in vacuum heating can obtain it from the above-mentioned company on request, mentioning "Domestic Engineering."

Front Cover Design of the Bishop-Babcock-Becker Co.'s New Catalogue.

HUMPHRYES MFG. CO'S NEW CATALOGUE.

The Humphryes Mfg. Co., of Mansfield, O., has just issued a new catalogue, No. 102, illustrating and describing domestic water supply systems, both hand and power for shallow and deep well use, also power pumps and working heads. The catalogue consists of 64 pages, 6x9 inches in size, and interested parties can secure it from the above company on request, mentioning "Domestic Engineering."

The Metal Market

Pig Iron Consumption Increasing.

Export orders for rolled steel products outside of wire have decreased some, but for the month of May the total will be more than 200,000 tons. Car shops have taken orders for over 25,000 cars since May 1st. Most of the steel requirements of manufacturers have been covered or will be within a few days. Orders taken by fabricating shops during May amount to more than 60,000 tons including the elevated extension in Brooklyn. The wire mills are doing a very large business, and with Italy entering the war it is expected that a large tonnage of barbed wire will be required. Keen competition among the wire mills exists for domestic orders resulting in commissions of $1 per ton for prompt shipment by the independent mills. The labor shortage is a cause for worry to manufacturers owing to the return to Italy of many Italian laborers who have been working in the mills of Western Pennsylvania.

Pig iron consumption continues to increase. Buyers who had contracted for July delivery are drawing on the furnaces for iron for forward shipment. Small foundries are sending in new requisitions from nearly all parts of the country. At Buffalo ten of the twelve furnaces in blast are shipping iron as soon as produced. At Pittsburgh an inquiry for 10,000 tons of steel making iron is out. The Carnegie Steel Co. is operating 40 of its 50 stacks, the Isabella having recently gone in blast. At the beginning of the year the same company had but 23 furnaces in blast. Southern iron is firmly held and $9.75 Birmingham is the price for immediate delivery. Southern furnaces have sold in May about 100,000 tons which is a slight falling off compared with April. Sales of basic at Pittsburgh have been heavier than reported, some estimates being as high as 50,000 tons during the past few weeks. On the whole the producers are greatly encouraged and are preparing for a much larger business during the summer and fall than they had hoped for early in the spring. Quotations are as follows:

No. 2X Northern Foundry, New York	$14.25 to $14.50
No. 2X Northern Foundry, Buffalo	12.75 to 13.00
No. 2 Southern Foundry, Birmingham	9.75 to 10.00
No. 2 Southern Foundry, Cincinnati	12.65 to 12.90

No. 2 Southern Ohio Coke, Cincinnati..... 13.25 to 13.75
No. 2 Northern Foundry, Chicago..... 13.25 to 13.75

Copper.

Better shipping facilities to European ports resulted in increases of weekly shipments of copper as compared with April. The total for May will be about 70,000,000 pounds as compared with 37,000,000 pounds during April. The tone of the market is firmer than reported last week, although the London market for electrolytic continues unsettled. Imports of copper at all points during the month of May amounts to about 15,000 tons. Producing interests quote 18⅞ cents delivered thirty days, while second hands, finding it difficult to make sales over 18¼ cents delivered thirty days for June and July shipment, are asking 18½ cents because of the advance in tin, lead and spelter.

Tin.

After declining to 36 cents the price of spot tin advanced on Saturday to 37½ cents. A much stronger tone developed at New York influenced by higher prices in London for both Straits and standard contracts. Consumers from the interior were not numerous, but dealers who have taken additional lots of spot June and July recently are said to have taken spot on Friday at 37⅛ cents. Dealers are shipping tin on June contracts which will increase deliveries to be reported during May, estimates of which vary, but the average is about 6,000 tons. The visible supply for the United States during the month will be about 7,500 tons including arrivals on the Pacific coast. May arrivals will amount to about 3,500 tons and stocks on the first of June were 3,041 tons, making the total supply from the Atlantic seaboard about 6,550 tons.

Lead.

The American Smelting & Refining Co. again marked up the price for lead $2 per ton, to 4.50 cents in 50 ton lots for shipment from the West. Spot in the open market at New York is held at 4½ cents and at East St. Louis at 4.42½ cents.

Spelter.

Spelter is mysterious and sensational, prices advancing as high as 23½ cents for prime Western grades for spot delivery. At the close of the week car load lots were quoted at 23 cents for early June shipment and sales of 200 tons or more at 22 cents to 23 cents for July and 21 cents to 22 cents for August shipment.

Old Metals.

The market for old metals was firm and a moderate demand existed, keeping prices up, which are quoted approximately as follows for selling prices:

Copper, heavy cut and crucible	17⅛ cents
Copper, heavy and wire	17 cents
Copper, light and bottoms	15 cents
Brass, heavy	11⅛ cents
Brass, light	9⅛ cents
No. 1 clean brass turnings	12¼ cents
No. 1 composition turnings	12½ cents
Lead, heavy	3.90 cents
Tea lead	3.65 cents

Logan, O.—Warren H. Bright has opened a plumbing establishment here.

Philadelphia, Pa.—H. L. Roberts has moved his heating business from 1512 Vine Street to 228 North Sixteenth Street.

Chicago, Ill.—Jos. P. Luby has purchased the late Thomas J. Dolan's plumbing establishment at 5150 South Halsted Street.

Grand Rapids, Mich.—Clemens & Brakesma have purchased the plumbing business of A. Vollette & Co., at 1401 Lake Drive.

A SOCIAL EVENING WITH ALBANY PLUMBERS.

The Master Plumbers' Association of Albany, N. Y., officiated with an old-fashioned family "at home" at the formal opening and dedication to mirth and music of Moran Hall in that city on Thursday evening, May 20th.

The program of the evening's festivities included card parties, dancing, a musicale and refreshments. The committee which arranged for the gathering was composed of: Thomas F. Nolan, chairman; John H. Moran, Joseph O. Stapf, J. T. Kerwin, L. Palmatier, M. J. McKeon, Edw. J. Ryan, Frank F. Schimpf, J. J. Gorman, James H. Doody, Thomas A. O'Malley and John E. Dugan.

Women's Auxiliary of Kansas City Master Plumbers' Association Endorses Our Campaign Against Plumbing Jokes.

Editor "Domestic Engineering":—The Women's Auxiliary to the Association of Master Plumbers of Kansas City, Mo., most heartily appreciates the campaign you are conducting against ridiculing the plumbers' craft. We, too, hope the day is near when the master plumbers will rise to their proper sphere and will inspire public confidence.

Yours sincerely,
D. E. Allison, Corresponding Secretary.

James Henry.

James Henry, formerly a master plumber of Louisville, Ky., but recently associated with M. E. Burke, 1013 South Second Street, died recently following a short illness. He is survived by seven sons and a daughter.

Alvin P. Seeton.

Alvin P. Seeton, who for thirty-five years had been engaged in the plumbing business in Goffstown, N. H., died May 20th after a long illness. He was in his sixty-fifth year at the time of his death. Mr. Seeton was a native of Londonderry, Nova Scotia, but removed to Goffstown when 29 years of age.

M. A. Thompson.

M. A. Thompson, the founder and former proprietor of the M. A. Thompson Plumbing Co., at Tacoma, Wash., died at the Western State Hospital in that city on Friday, May 7th, after a short illness. He was a member of the Tacoma Lodge of Elks and of the Masonic Lodge in that city, and he had a large circle of friends both in and outside of the trade. His wife survives him.

George E. Fenn.

George E. Fenn, of the Fenn Ventilator Co., Boston, Mass., accidentally shot himself while packing his trunk preparatory for a trip to Vermont and died the following day, May 28th, at the Melrose hospital. Mr. Fenn was placing his revolver in the trunk, and as he did so the trigger caught on the side of the trunk, discharging the weapon. The bullet entered Mr. Fenn's temple and although surgeons made heroic efforts to remove it and save his life it was without avail. Mr. Fenn was 49 years of age, and had been engaged in the ventilator business for many years. He was very prominent in Masonic circles. Funeral services were held at his home in Melrose on Memorial Sunday.

Among the Plumbing and Heating Contractors

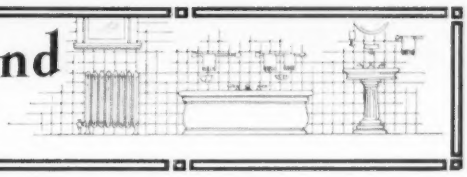

Illinois

Chicago and Vicinity.

Radical changes in Chicago's method of disposing of its sewage were recommended recently in a report submitted to the Chicago Real Estate Board by experts and engineers who have been studying the problem for a year. The present system is declared by the experts to be unsatisfactory, a menace to the city's drinking water supply and a nuisance to cities and villages in the state. The report was made by Dr. George A. Soper, former president of the metropolitan sewerage commission of New York; John D. Watson, chief engineer of the sewage disposal works of Birmington, England, and Major Arthur J. Martin, consulting engineer of London. Mayor Thompson, who attended the meeting, was astounded when he heard the report. "I had believed that Chicago had a splendid sewage disposal system," he said, "and thought we were prepared for all time to come. If changes in our sewage system are necessary I feel they should be made, for we cannot have a great city unless we have a healthy community, and the proper disposal of sewage directly affects the health of any community. By sending the filth which formerly stagnated in the Chicago River down into the valley, the nuisance-producing material has been transferred from one place to another, but has not been disposed of in a sanitary manner." It was pointed out by one of the engineers that for many miles the river water is not fit to wash in, to water stock in, or for any other domestic, agricultural and industrial uses. It is declared to be discolored, malodorous and poisonous. Fish die in it, and swimming in it is repugnant to the senses.

John T. Mangan, of Cook & Mangan, 1929 Wabash Avenue, has recently recovered from an illness which divorced him from his business duties for nearly four weeks. He is back again in the harness looking as spry as ever.

Massachusetts

Boston and Vicinity.

James H. Sherman, who had been engaged in the plumbing business in New Bedford for nearly forty years, retired this month, closing out the business and leasing the shop to an electrical concern. Mr. Sherman was located at the corner of Union and Water Streets during the entire time that he was in business.

Martin W. Dugan, who has been employed for several years past by various North Shore master plumbers, has become a master himself and has opened an establishment at 9 Market Street, Newburyport.

Another entrant into the plumbing business is J. Frank McFadden, who has established himself at 2083 Massachusetts Avenue, Cambridge. Mr. McFadden has worked at plumbing and heating with Cambridge concerns for the past fifteen years.

The building committee having charge of the alterations and improvements to the high school at Lynn has placed the heating and ventilating contract with Huey Bros., of Boston.

The contract for plumbing in the town hall at Manchester has been placed with the Robert Robertson Co., of Beverly.

The plumbing in the addition to the high school building in Chicopee will be installed by the J. J. Cotter Co., of Springfield, for $4,990, and the heating by the Holyoke Supply Co., for $8,965.

Among recently organized corporations are the following: The Plumbing Service Co. of Boston, organized by W. S. Smith, Robert W. Hill and F. L. Tibbetts, with a capital of $10,000, to conduct a plumbing business; The Carl P. Peterson Co., of Malden, organized by Carl P. Peterson, A. S. Smith and M. A. Murrican, with a capital stock of $5,000, to conduct a general plumbing, heating and gas fitting business, and The Benn Pump Works, of Boston, with a capital stock of $25,000. The incorporators are E. H. Benn, Samuel Ruff and C. M. Shea.

Maine

Portland and Vicinity.

The plumbing contract for a new building to be erected at the corner of Oak and Free Streets, Portland, Me., for the Young Women's Christian Association, has been placed with Scribner & Iverson. The building will be modern in every particular and in addition to furnishing a home for association members it will have considerable space devoted to stores and offices.

Myles F. O'Sullivan, of 114 Bracket Street, Portland, has a contract for extensive plumbing work at the residnce of W. W. Fogg on Danforth Street.

Bids are soon to be called for heating and plumbing work on the new $55,000 addition to the girl's dormitory at the state normal school at Gorham, near Portland. The architects are Miller & Mayo, of Portland. Another building for which contracts are expected to be placed soon is the new St. Barnabas hospital in Portland. This will be a modern hospital plant and will be erected on the site of the present hospital. George Burnham and E. Leander Higgins, of Portland, are the architects.

Plans for a central heating plant for the Penobscot county court house, jail and other buildings at Bangor are under consideration by the county commissioners and although no definite plans have yet been announced it is expected that the proposition will be undertaken during the summer.

Wiley & Calhoun, of Portland, have the contract for heating and ventilating the new high school building to be erected at Brunswick.

J. A. Cyr has severed his connection with the Briggs Hardware Co., at Caribou, and has opened a plumbing establishment on Water Street in that town.

A. W. Carlson has bought out the interest of L. A. Watson in the plumbing business of Watson & Dickinson, of Modesto, Cal.

YOUR COPY IS READY

Our new Catalog is compiled as a useful guide and handbook for the man interested in

Modern Gas and Gasoline Water Heaters

It is brimful of information that the up-to-date plumber wants.

Tells you why the "A C M E" is the *most popular water heater* on the market.

Send for your copy today—it's free.

The Acme Specialty Mfg. Co.

Manufacturers of

Gas and Gasoline Water Heaters

W. W. STATION **TOLEDO, OHIO**

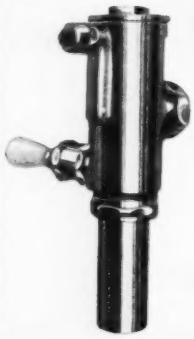

Elk Flush Valve

The most **Simple** and **Practical** Flush Valve made.

Guaranteed to be better than any water Controlled Flush Valve on the market.

The valve is right—The price is right.

Send for literature.

Single Faucet & Flush Valve Co.
617-631 West Jackson Blvd.
Chicago, Ill.

The Trane Mercury Seal Vacuum-Vapor System of Heating

(Patented)

is a system by itself and the simple addition of the *Trane Mercury Seal* (the only real vacuum producer), will enormously increase the efficiency of any other good vapor system, increasing its temperature range by 100%.

Try this out on your next installation. Write for details.

VACUUM HEATING CO.

1315 Cherry Street **Philadelphia, Pa.**

Ohio

Cincinnati and Vicinity.

At the regular monthly meeting of the Cincinnati Master Plumbers' Association held recently delegates were elected to represent that organization at the convention of the National Association of Master Plumbers, to be held in Chicago on July 13th, 14th and 15th, as follows: C. T. Schlemmer, Ray J. Hillenbrand, Andrew J. Murphy, Thomas Dyer, E. H. Morgan, J. J. Vogelpohl, Ed Kleine, J. Fern, John Kelley, George M. Mellor, R. T. Cluxton, Harry Dressler and Edward Frank. Many more will attend, however, it being expected that not less than fifty members, accompanied by their families, will comprise the Cincinnati delegation. Arrangements will be made for a special car for the trip.

Plans for the new Walnut Hills-Hyde Park high school were approved by the Cincinnati Board of Education a few days ago. Architects Garber & Woodward and Cass Gilbert, of Cincinnati, designed the school. It will cost about $800,000, exclusive of the ground, making it the largest construction job of the year outside of the courthouse. It is expected that work will be started within two months.

In spite of the extremely discouraging weather, a number of contracts are being awarded by local architects almost daily. Architects Stewart & Stewart have let the plumbing on two residences in Price Hill to Schuster & Wagner; the Cluxton Plumbing Co. landed the plumbing contract on a $9,000 residence being built for Joseph Bohnert; T. J. Conners secured the heating contract and the North Cincinnati Plumbing Co. will install the plumbing and gasfitting in a brick duplex apartment designed by Architect Anton Reig for Emil Ehrlich.

Geyer & Grimes, of Urbana, O., were awarded the plumbing, heating and ventilating contracts on the handsome new Masonic Temple being erected in that city. The firm has been particularly fortunate in landing big jobs, handling the work on the ten-story Schwind building and the Rike-Kumler seven-story department store building in Dayton.

Architect George Barkman, of Hamilton, O., reports that he has more than $50,000 worth of new work on hand, contracts on which will soon be awarded. Schools at McGonigle, Okeana, Amanda and Williamsdale, nearby villages, a $6,000 addition to the Lane Public Library, a new Methodist church, as well as some large residences are among the jobs on hand.

The revised plumbing code of the city of Youngstown, which has been before the city council for nearly a month and a half, has been passed by that body, and is now in force.

The Samuel A. Esswein Heating & Plumbing Co., of Columbus, was the low bidder on the repairs and alterations in the plumbing and heating systems at the Eleventh Avenue, Douglass and Clintonville school buildings.

The Ohio Legislature has made a radical change in the provisions of the Mechanics' Lien Law which will affect plumbers to a large degree. Under the former law real estate mortgages were subsequent liens to mechanics' and supply companies' liens, but now real estate mortgages have the prior claim. An amendment was inserted by Representative Terrell, of Cleveland, making it necessary for the owner to be notified by parties holding claims within five days, whereas no notification was necessary under the old law, and the owner had to secure the information or take the risk of paying claims the second time.

Kentucky

Louisville and Vicinity.

The J. E. Gray Co., 2205 St. Louis Avenue, was recently awarded the plumbing contract on the new refectory, to be erected in Shawnee Park, through the efforts of the Merchants' Ice & Cold Storage Co., which has a five-year contract with the park authorities. The contract calls for an expenditure of $1,049 on plumbing, which includes a comfort station in the basement of the building.

J. L. Brownfield & Co. have been awarded a number of good hot water heating contracts the past few weeks, one of the best being the heating in the handsome new residence of W. C. Brohm on Eastern Parkway.

W. W. White, formerly secretary of the Kentucky State Master Plumbers' Association, has turned all of his books and records over to W. H. Matlack, the new secretary of that organization. Mr. Matlack is now acting in the dual capacity of secretary of both local and state organizations.

The Louisville Master Plumbers' Association at one of the regular meetings held on Monday evening, May 24th, took up the card index system of keeping track of delinquent contractors and other delinquent purchasers of plumbing work. The matter has been taken under advisement and a report will be made by a special committee at the next meeting of the organization.

W. G. Coutts, of Harlan, Ky., has been fairly busy this spring and reports a good contract covering the plumbing installation for the new residence of C. E. Ball.

Architect F. J. Manley, of Lexington, Ky., has prepared plans for remodeling the building adjoining the Lexington Y. M. C. A. This building will be used for dormitory purposes and several lavatories and other plumbing fixtures will be installed.

T. J. Price, of Danville, Ky., recently completed a contract on property owned by W. G. Prewitt, of Perryville, Ky., and is now working on a contract for Col. George F. Anderson, who is having two bath rooms installed, as well as hydrants to furnish water over his entire farm.

T. M. M. Coulson Co., of Paducah, Ky., has completed a $2,000 heating installation at the First Baptist church and has been awarded a nice contract for heating and plumbing the new residence being erected by E. W. Baker at Twenty-first and Jefferson Streets in that city.

Tennessee

Chattanooga and Vicinity.

An addition of 100 rooms is being built to the Signal Mountain Inn at Chattanooga, Tenn. Each of these rooms will have a private bath and full plumbing installations. The foundation work was started in the middle of May.

Oscar Holoquest, formerly connected with the McFarland Machine Works, has opened a plumbing and steamfitting business on Waldran Avenue, McKenzie, Tenn., facing the L. & N. R. R.

Browne & Borum, of Memphis, have several contracts for plumbing public buildings.

The Sewell Plumbing Co., of Jackson, Tenn., has moved from 102 Church Street to 306 Main Street. This company has the contract for plumbing the residence of J. W. Vanden, president of the First National Bank.

R. H. Vandevelde & Co., of Dyersburg, Tenn., are installing plumbing systems in the residences of R. C. Cochran and S. W. Blevins.

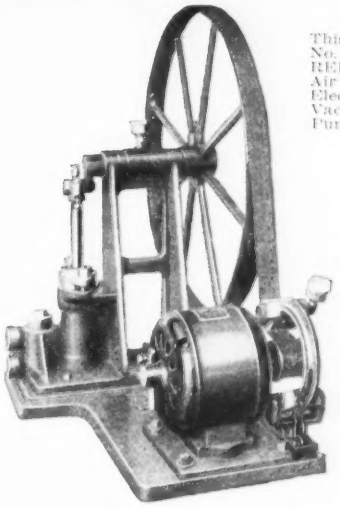

This is the No. 1279 RELIABLE Air Line Electric Vacuum Pump

WHEN RELIABLE Vacuum Pumps arrive on the job they are ready to be installed, quickly and easily —no adjustments are necessary as each pump is given a thorough, practical test at our factory. Because of the simple, durable construction and the dependable Automatic Electric Switch

RELIABLE
Vacuum Pumps

operate smoothly and evenly without noise, and are most economical in current consumption. The operating cost is only 1/3 to 1/5 as much as for other vacuum pumps. RELIABLE Heating Specialties—Electric and Hydraulic Vacuum Pumps, VacUstats, Vacu-Traps, Vacu-Graduate Packless Valves, "4 V" Valves, Vacu-Checks, etc.—are Standardized and Staple, and carried in stock by most representative jobbers.

Write today for your copy of new RELIABLE Heating Equipment catalog. Ask for Booklet "F."

THE BISHOP-BABCOCK BECKER CO.

Factories and General Offices, Cleveland, Ohio

New York, Chicago, Cincinnati, St. Louis, St. Paul, Milwaukee, San Francisco

Dole

Graduated Packless Steam Valve

Is the steamfitter's standby. Reliable in every feature.

Easy to change to any capacity without dissembling parts.

Operates with one-half turn. Our valve literature will interest you—write for it.

The Dole Valve Co.
208 N. Fifth Ave., Chicago

Complete line of Standard Steam and Hot Water Radiator Valves

THE REAL PORTABLE

VISE BENCH

Made to fit any vise.
Pays for itself on first job in cartage alone.
Easily folded and carried to job like any other tool.
Saves time and labor.
It is ready for use all the time.
Thousands in use by up-to-date plumbers and fitters.
Write today for booklet containing full details and names of satisfied users.
Responsible agents wanted all over the United States.

STANDARD IRON WORKS
540-50 W. 58th St New York City

This ad is our Salesman

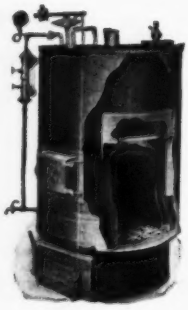

We issue a 70 page Fully Illustrated 2-color Catalog. We will gladly mail it on request. It describes and illustrates the advantages of the

Dunning Steel Boilers

30,000 in use; over 1,000 in U. S. Army Posts. Cannot crack; will burn any fuel.
Our Catalog No. 55 shows Pneumatic Tanks. Ask for it too.

New York Central Iron Works Co.
Box 68, Hagerstown, Md.

In a Class By Itself

For making connections in soil pipe, there is nothing on the market as satisfactory as the

Sisson Insertable Joint

Simply cut out of pipe the length of fitting desired and 11½ inches for the Sisson Joint. Not necessary to spring stack or disturb pipe.
A great labor-saver.
Ask for prices and discounts.

R. Estabrook's Sons
1st and C Streets
SOUTH BOSTON, MASS

California

San Francisco and Vicinity.

The San Francisco Board of Public Works has recently awarded several contracts and has called for bids on other work. The Burnham Plumbing Co., 1220 Webster Avenue, secured the contract for a disinfector for the new county jail at $1,397 and a similar contract for the new San Francisco hospital. The Wittman-Lyman Co., 341 Minna Street, was awarded a contract for pipe and connections for the refrigerating room at the county jail, the price for the work being $2,344. Bids on the plumbing and heating for the new Juvenile Detention Home and on the Nurses Home at the Isolation Hospital have been called for.

Plans have been completed and bids have been called for to be opened June 22nd for a new boiler and boiler house at the United States Marine Hospital in San Francisco.

Plans are nearly completed for a new twelve-story bachelors' hotel to be erected for Joseph Herrscher at 429 Front Street, which will cost about $85,000. The building will contain eighty rooms with baths.

Other Cities in the State.

C. A. McNeill & Co., of Los Angeles, are the low bidders at $7,060, and will be awarded the contract for furnishing and installing the heating system in the Fourteenth Street Intermediate school building.

The N. O. Nay Co., of Pasadena, has been awarded the contract for the heating and ventilating in the Redonda Union High school, at $10,140. J. T. Newell, of 136 West Seventeenth Street, Los Angeles, was the successful bidder on the plumbing at $5,560.

Foss & Jones, of Pasadena, have secured the heating contract on the Normandie school building, at $3,671.

G. Cooney, of the firm of Cooney & Winterbottom, Alhambra, has taken his family on a visit to the old home in Nebraska for a two months' stay. No little two weeks vacation for Mr. Cooney when he goes back to look over the ol' swimmin' hole.

Cecil Heap, of William Heap & Sons, Grand Haven, Mich., has been spending the week calling on his friends among the Los Angeles jobbers. He will take in the Fair at San Francisco before returning home.

Washington

Seattle and Vicinity.

The plumbing and heating firm of Apfel & Jansen, of Seattle, has been dissolved by mutual consent. An office will be temporarily maintained at 1019 Post Street for the completion of present contracts, the collection of accounts and the payment of bills. P. F. Apfel, who is closing the business, will hereafter devote himself to the manufacture and sale of his patent electric heating system.

The Inland Plumbing & Heating Co., of 907 First Avenue, Spokane, has filed a voluntary petition in bankruptcy.

Bids have been called for by the municipality of Aberdeen for 5,000 feet of ¾-inch, 5,000 feet of 1-inch and 7,500 feet of 2-inch tar dipped wrought iron pipe.

Bids for the installation of both plumbing and heating in a two-story apartment house to be built for J. Bornstein, in Seattle, will be received by Architects Thompson & Thompson, Mutual Life Building, about June 10th.

Patents

Heating Department.

1,140,504. Die-Stock. Lewis B. Curtis, Bridgeport, Conn. A thread cutter comprising a work holder, a die guide carried thereby, a die carrier having a threaded connection with the work holder, and die-engaging and adjusting blocks pivotally connected to the guide and each provided with a continuous die-engaging surface that is curved on an arc of a circle and longitudinally inclined.

1,140,896. Water-Heater. Adelbert Forsyth, Milwaukee, Wis., assignor to Milwaukee Reliance Boiler Works, Milwaukee, Wis. In a water heater having a steam pipe in communication with its top portion and a water pipe in communication with its lower portion, a valve for the water pipe, a balancing steam pipe in communication with the upper portion of the heater, and a balancing water pipe in communication with the lower portion of said heater, the discharge mouths of said pipes being alined and spaced a predetermined distance apart; the combination of a reversible float casing having the pipe sections of different lengths extending respectively from its ends, the combined length of said pipe sections and float being approximately equal to the space between the steam and water pipe with which they are adapted to be connected, coupling means for selectively locking the ends of the float pipe sections to the ends of the steam and water pipes whereby the valve-casing is raised or lowered to predeterminedly regulate the water level within the heater, an oscillatory float mounted in the valve casing, an arm carried by the float, a two-part rod connecting the arm and valve of the water feed pipe, and means for locking the two-part rod in adjusted positions as to length.

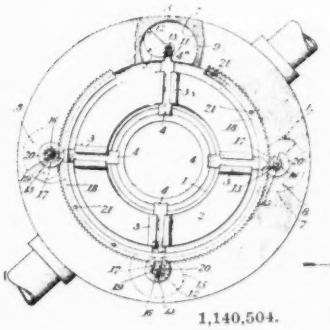

1,140,504.

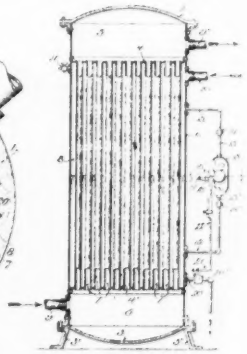

1,140,896.

1,140,630. Valve. William S. Sutton, Rockford, Ill., assignor to American Radiator Company, Chicago, Ill., a Corporation of New Jersey. A vacuum relief valve comprising a frame, an annular flange extending radially inward from the walls of said frame and providing a flat annular seating surface, a flat valve disk within said frame, yielding means tending to hold said disk on said seat to close the opening surrounded by said seat flange, a second annular flange extending radially inward above said valve seat and surrounding said valve disk and having a diameter only slightly greater than that of the valve disk, the peripheral surfaces of said flat disk and second annular flange being in parallel relation and the upper surface of said flat disk disposed below the upper surface of said

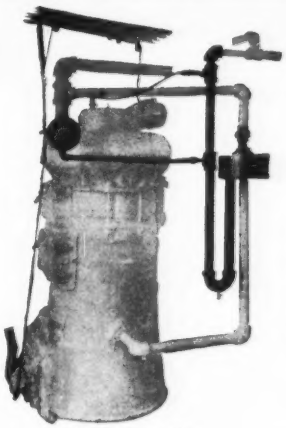

Patents pending

Where Efficiency Counts

You cannot be too careful in selecting the Vapor Heating Systems you install.

If you are not familiar with the Hutchison Modern Heating Equipment, it is worth your while to investigate NOW.

Nothing on the market equal to the

Hutchison Trap—Receiver and Damper Regulator and Packless Modulating Radiator Valve

Requires 20% less radiation and 30% less fuel.

Cheapest in the beginning—cheapest in the end.

All Hutchison Specialties are *unconditionally guaranteed.*

Our Catalog is of interest to every heating man. Send for your copy.

HUTCHISON VAPOR HEATING CORPORATION

Woodward Bldg. Washington, D. C.

Tested with the Rest and Found to be the Best

A great victory for the "HOFFMAN"

Chosen as the Official Heater for the Panama Pacific International Exposition.

The New Improved

HOFFMAN

Automatic

Gas Water Heater

combines all good features of other heaters, and has none of their faults.

Costs less—does more.

Always satisfactory.

The "HOFFMAN" is a salesman in itself. It will pay you to connect up with the "HOFFMAN" Line. Write for literature.

See our full line on display at Mechanics Hall, Panama-Pacific International Exposition.

The Hoffman Heater Company

Lorain, Ohio

THE CADILLAC BABY SEAT

(Patent Pending)

is built to meet the demand for a convenient Baby Seat that can be quickly adjusted to any water closet seat. Baby cannot fall or loosen spring clamp fastener.

WARNING

Purchasers of any infringing Cadillac Baby Seat lay themselves liable to prosecution equally with manufacturers.

Your customers will ask for the *Cadillac Baby Seat*, so why not stock it now?

Write for prices.

The Cadillac Way

CADILLAC FURNITURE CO.

1005 Smith Building Dept. E DETROIT, MICH.

The Loew Victor Pipe Machine

makes pipe threading easy and reduces expense to a minimum.

Investigate. Write for Catalog and details.

THE LOEW MANUFACTURING CO.

9100 Madison Ave. N. W. Cleveland, Ohio

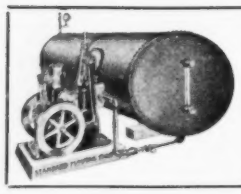

WATER SUPPLY SYSTEMS and PUMPING UNITS

Hand Power, Automatic Electric Power, Gas and Gasoline Power. Get our Catalogues and Prices before you buy.

STANDARD PUMP & ENGINE CO.

518 Prospect Ave., N. W. Cleveland, O.

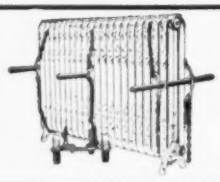

BUELL'S COMBINED CARRIER and TRUCK

is the steamfitter's best friend. Handiest device ever made for carrying radiators through narrow halls and difficult places. Write for details and prices.

BUELL BROTHERS

FULTON, N. Y.

HUNT'S COMBINED FLOOR DRAIN AND CLEAN-OUT

Saves expense of tearing up floors. A number of these placed in basements of large buildings gives free access to all parts of drainage system. Cast in one piece.

Write for circulars.

William Hunt, 1512 Grand Ave., St. Louis, Mo.

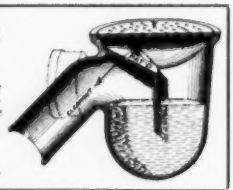

WE MAKE A SPECIALTY OF

General Foundry and Machine Work

Let us figure with you

MODERN IRON WORKS, Quincy, Ill.

Want to Sell Your Business?

There are hundreds of men who are seeking locations suitable for the establishment of a business of their own. One of these men may be the prospective buyer of your business. The best way to find out is through an advertisement in the Classified Department of "Domestic Engineering."

flange when said disk is in closed position whereby the flow of air past the valve disk into the frame is restricted during the greater part of the movement of said valve disk away from its seat to thus provide substantial change in pressure against the valve during such travel thereof, said restricted passageway being increased only when the valve disk rises above the second flange to then allow substantial change in the pressure.

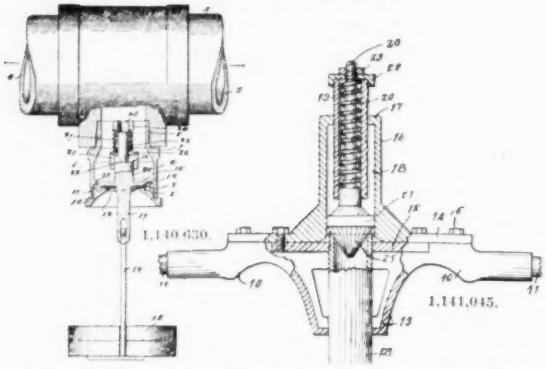

1,141,045. Reamer Attachment for Die-Stocks. Walter S. Donaldson, Omaha, Nebr. In combination, a barrel having a rectilinear bore and a threaded aperture in one end, a sleeve adjustably positioned in said aperture, a holder of rectilinear formation slidable and non-rotatably mounted in said bore, a shank on said holder extending exteriorly of the upper end of said sleeve, means for normally retaining said holder in downwardly extended position, means carried by the upper end of said shank for limiting the downward movement thereof, and a reamer secured in said holder.

Plumbing Department.

1,140,347. Spraying Attachment for Bath-Tubs. Henry Barnes, Brooklyn, N. Y. In a bath tub spraying attachment, branch pipes located at the foot of the tub, a support, a holding pad connected therewith, the inner ends of the branch pipes secured to the support, holding pads located at the sides of the tub, housings connected therewith, the outer ends of the branch pipes sprung into the mouths of the housings and adapted thereby to exert an outward pressure against the pads.

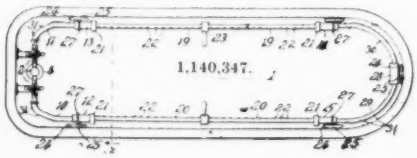

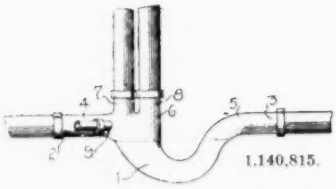

1,140,815. Sewer-Trap. Ross Harkness, St. Clair Heights, Mich. A sewer trap having its terminals disposed substantially in alinement and its intermediate portion depressed to provide a water seal, one terminal of said intermediate portion being enlarged to form a chamber, said chamber having two upstanding branches which are disposed opposite the adjacent end of the water seal, one of the branches constituting a clean-out and the other

a fresh-air inlet, and a lateral branch extending from the chamber and constituting a connection for a laundry tub of the like.

1,140,377. Ball-Cock. John H. Johnson, Chicago, Ill., assignor to Federal-Huber Company, Chicago, Ill., a Corporation of Illinois. In a ball cock, a casing having a cylindrical bore at its upper end, transverse baffles in said casing forming a water channel having a reverse bend, said baffles having openings in alinement with said bore, a valve at the lower end of said casing, said valve having a valve stem adapted to be introduced and removed from said casing through said alined openings, the portion of said valve stem positioned in the water channel when the valve is open being recessed, said recessed portion terminating in edges at the diametrically opposite sides of the stem which when in position for operation will present an edge to the direction of flow so that the water will freely pass with little impediment.

1,140,597. Installation for Warm-Water Supply. Hugo Junkers, Aachen, Germany. Water heating apparatus comprising the combination of a current heater for heating water flowing through it, a storage heater for heating water stored therein, heating devices for the heaters, automatic regulating means for the heating devices, a discharge pipe connected to the heaters and automatic means for causing water supplied through the discharge pipe to be drawn first from the storage heater and afterward from the current heater; substantially as described.

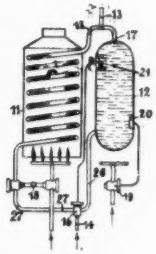

1,140,597.

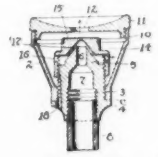

1,140,507

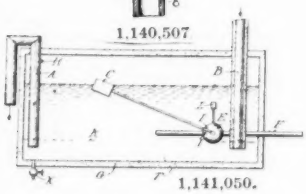

1,141,050.

1,140,507. Drinking Fountain or Faucet. Arthur I. Fischer, Cleveland, Ohio, assignor to Glauber Brass Manufacturing Company, Cleveland, Ohio. A drinking device comprising a body having an annular shoulder and an external screw-thread extending from said shoulder to the end of said body and having a conical nipple provided with a central water passage, a flaring cup having an internal screw-thread at its reduced end engaged with said body in abutting relations with said shoulder, a hood having a conical recess over said nipple and adjustably mounted in respect thereto by screw-engagement with said body and provided with side outlets, and a screw cap for said cup having a central water outlet over the closed top portion of said hood.

1,141,050. Sewage Disinfection. Leslie C. Frank, Washington, D. C. Means for disinfecting sewage comprising a closed tank having inlet and outlet conduits opening into the lower part of the tank and the outlet pipe extending to a level above the tank, a pipe for conducting steam into contact with the sewage, a float, and a valve in said pipe having a lost-motion connection with said float.

Pittsburgh, Pa.—The Joseph A. Langdon & Sons Co., of this city, has been awarded the contract for the installation of heating and ventilating systems in the new school building at Tarentum, Pa. Consideration of $17,000.

DIFFERENT
of course—all
Hartley Pumps
are different, that's the reason the plumbers have made the Hartley Pumps their standard. Look at this one attached to the wall. It looks right—is right—keeps right. We have a special introductory proposition to make at this time, both to our old customers and prospective ones. Write and ask us to tell you about it.

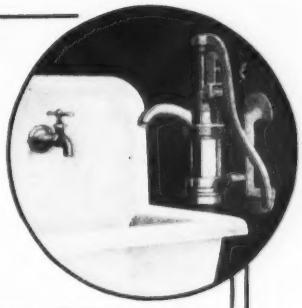

C. J. HARTLEY CO.
EATON and WATER STS. PEORIA, ILL.

Detroit Valve and Fittings Co.
Manufacturers of
Malleable Iron Fittings and Drainage Fittings.
Special Malleable and Grey Iron Castings.
DETROIT, MICHIGAN
Write for Catalogue

KEWANEE PRIVATE UTILITIES
Original air pressure Water Supply Systems.
Easiest installed Electric Lighting Plants.
Simple, successful Sewage Disposal Systems.
Convenient Gasoline Storage Plants.
Vacuum Cleaning Systems.
We sell through the trade. Install Kewanee Systems for profit and satisfied customers. It means big business.
Send for illustrated bulletins.
KEWANEE PRIVATE UTILITIES COMPANY
(Formerly Kewanee Water Supply Co.)
232 S. FRANKLIN ST. KEWANEE, ILLINOIS
Branches: 50 Church St., New York; 1212 Marquette Bldg., Chicago

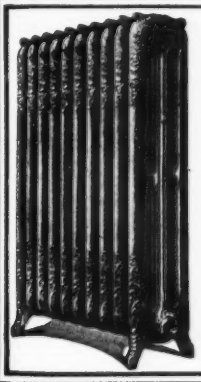

Prompt Shipments
MEAN PROFIT AT THIS SEASON OF THE YEAR
BUY
LOGAN RADIATION
Highest Quality and Efficiency and Satisfy Your Customer
Logansport Radiator Equipment Co.
LOGANSPORT, IND.

Classified Advertisements

Advertisements under this heading 4 cents per word per issue, address included. Send cash with order. To insure insertion copy should be received not later than Wednesday afternoon.

Situations Wanted.

SITUATION WANTED—WHO CAN USE a plumber, steam and hot water fitter? Wages no object first year. Eighteen years' experience. Address 2173, care "Domestic Engineering," Chicago. 6-5; 12

Situations Open.

LIVE SALESMEN CAN SECURE GOOD specialty. Good commission. Good territory. Spacesaving Appliance Co., 101 Park Avenue, New York City. 5-29;6-5;12;19

WANTED—RESIDENT SALESMEN TO represent manufacturer of plumbers' brass goods in limited territory on commission basis. Write giving experience and references. Address 2172, care "Domestic Engineering," Chicago. 6-5

WANTED—A FIRST-CLASS EXPERIenced boiler salesman for Chicago and Cook County. Must be acquainted with the trade. Apply L. J. Mueller Furnace Co., 197 Reed St., Milwaukee, Wis. tf.

WANTED—SALESMAN TO CALL ON plumbing trade in Salt Lake City. Must be well posted in plumbing line and a hustler. Give name of last employer, average amount of yearly sales and salary expected. Address N. O. Nelson Mfg. Co., Salt Lake City, Utah. 5-29;6-5

For Sale.

FOR SALE—$2,500 WILL BUY OUR plumbing and heating business. Address Box 575, Emporia, Kansas. 6-5; 12

FOR SALE—BARGAIN IF SOLD NOW. Plumbing, heating, sheet metal business. In wheat country of Southeast Kansas. Act quick. Address 2174, care "Domestic Engineering," Chicago. 6-5

FOR SALE—PLANT SUITABLE FOR manufacturing electrical porcelain, or sanitary ware. Can be bought cheap. Thoroughly equipped, well built. Centrally located. Labor conditions right. Gas fuel. Shipping facilities unsurpassed. Address M. Co., care "Domestic Engineering," Chicago. 4-3; 5-1; 6-5; 7-3

Miscellaneous.

SELL YOUR SURPLUS COUPLINGS and fittings. Write us. The A. & J. Mfg. Co., 557 W. Lake St., Chicago. tf.

Books You Should Own.

TABLE—LOSS OF PRESSURE PER Lineal Foot in Ten-Thousands of a Pound of the Different Coefficients of Friction, by Isaac Chalmovitsch, M. E. Price 50c Portpaid.

HISTORY OF SANITATION. By J. J. Cosgrove History of the plumber's craft from the time of the primitive man up to our own day. 88 illustrations. Bound in cloth; postpaid, $1.50.

Domestic Engineering
445 Plymouth Court, Chicago

Use This Page To Get What You Want

If you are looking for competent employes; or if you contemplate a change in position, have a patent for sale; wish to purchase or sell a plumbing and heating business; second-hand machinery or tools; form a copartnership, etc., your advertisement on this page will put you in touch with the people you desire to reach.

The cost of insertion is only four cents a word and may mean many dollars to you.

Increase Your Earning Power

Our method of **Home Instruction** soon trains you as an **expert** in Plumbing, Sanitary Science and Engineering.
You can begin NOW without giving up your present position.
Easy, practical and fee reasonable.
Write TODAY for **Free Booklet** and full particulars.

The Anglo-American Sanitary Correspondence College,
10-12 West Ontario St., Chicago, Ill.
Prof. Arthur Bateman, Director.

S, ¼ S, ¾ S, R. B.

Put in the White House by the U. S. Government

F. E. CUDELL'S

Patent Sewer-Gas and Back Water Trap

For Wash Bowls, Sinks, Baths and Wash Tubs

CLEVELAND- OHIO

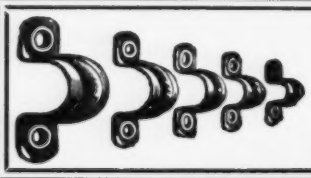

MALLEABLE AND WROUGHT PIPE HOOKS AND STRAPS

Complete stock of every size and kind. Quality the best that can be made.
B. B. Ornamental Pipe Straps, all even clean cut, brightly tinned.
Ask for Catalog No. 8 and Prices

Berger Bros. Co. Office, 229-231 Arch Street; Store, 237 Arch Street; Warerooms & Factory, 100-114 Bread St. **Philadelphia, Pa.**

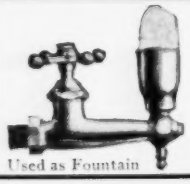

Used as Fountain

NIAGARA Combination Sanitary Drinking Fountain and Sink Bibb

Simplest and most practical device on the market.
Fool-proof. Adjustable to any pressure. Reasonable in price. Endorsed by all health authorities and sanitarians.
Used as a fountain, or in reversed position, serves as a bibb. Made in compression or self closing; bibb or basin cocks of brass, nickel plated. Write for circulars.

The K. & S. Specialty Mfg. & Sales Co., Cleveland, Ohio

As Ordinary Bibb

For Country and City Homes, Clubs, Public Institutions, Apartment Houses and Bath-Room Water Supply.

DAYTON WATER SYSTEMS

MANUFACTURED BY THE DAYTON PUMP & MFG. COMPANY
521 W. FIFTH
DAYTON, OHIO